Polo 1995 ➤

Automatic gearbox 001									
Gearbox ID	CMH	DPP	CMJ	DPN	EAR	EAT	EHD	EHE	ERZ
	ESA	EAW	FMB	FMD	FMA	FMC	FME	FMF	FMG

Edition 02.2001

Protected by copyright. Copying for private or commercial purposes, in part or in whole, is not permitted unless authorised by Volkswagen AG. Volkswagen AG does not guarantee or accept any liability with respect to the correctness of information in this document. Copyright by Volkswagen AG.

satelettronica

List of Workshop Manual Repair GroupsList of Workshop Manual Repair GroupsList of Workshop Manual Repair Groups

Polo 1995 ➤

Automatic gearbox 001

Repair Group

00 - Technical data
32 - Torque converter
37 - Controls, Housing
38 - Gears, Hydraulic controls
39 - Final drive, Differential

Protected by copyright. Copying for private or commercial purposes, in part or in whole, is not permitted unless authorised by Volkswagen AG. Volkswagen AG does not guarantee or assume any liability with respect to the correctness of information in this document. Copyright by Volkswagen AG.

satelettronica

Technical information should always be available to the foremen and mechanics, because their careful and constant adherence to the instructions is essential to ensure vehicle road-worthiness and safety. In addition, the normal basic safety precautions for working on motor vehicles must, as a matter of course, be observed.

All rights reserved.
No reproduction without prior agreement from publisher.

Copyright © 2010 Volkswagen AG, Wolfsburg

Contents

00 - Technical data . . . 1
1 Identification of gearbox . . . 1
1.1 Identification of gearbox . . . 1
2 Information on "Automatic gearbox 001" . . . 2
2.1 Information on "Automatic gearbox 001" . . . 2
3 Code letters, gearbox allocation, ratios, equipment . . . 3
3.1 Code letters, gearbox allocation, ratios, equipment . . . 3
4 Capacities . . . 8
4.1 Capacities . . . 8
5 Repair instructions . . . 8
5.1 Repair instructions . . . 8

32 - Torque converter . . . 12
1 Torque converter . . . 12
1.1 Torque converter . . . 12
1.2 Identification of torque converter . . . 12
1.3 Draining torque converter . . . 13
1.4 Removing and installing torque converter oil seal . . . 13
1.5 Installing torque convertor . . . 14

37 - Controls, Housing . . . 15
1 Locations of electrical/electronic components . . . 15
1.1 Locations of electrical/electronic components . . . 15
1.2 Components in vehicle . . . 15
1.3 Locations of diagnosis connections . . . 22
1.4 Components on gearbox . . . 23
2 Servicing gear change mechanism . . . 28
2.1 Servicing gear change mechanism . . . 28
2.2 Checking shift mechanism . . . 29
2.3 Checking operation of the ignition key withdrawal lock . . . 29
2.4 Removing and installing locking cable on vehicles with ignition key removal lock . . . 30
2.5 Checking and adjusting selector lever cable on vehicles up to 06.99 . . . 34
2.6 Checking and adjusting selector lever cable on vehicles from 07.99 . . . 35
2.7 Dismantling and assembling selector mechanism on vehicles without key withdrawal lock up to 06.99 . . . 37
2.8 Dismantling and assembling selector mechanism on vehicles with ignition key removal lock from 06.99 . . . 46
2.9 Dismantling and assembling selector lever on vehicles with ignition key removal lock up to 06.99 . . . 52
2.10 Dismantling and assembling selector mechanism on vehicles from 07.99 . . . 59
2.11 Removing and installing selector lever handle on vehicles from 07.99 . . . 62
3 Removing and installing gearbox . . . 65
3.1 Removing and installing gearbox . . . 65
4 Checking ATF level and topping up . . . 76
4.1 Checking ATF level and topping up . . . 76
5 Gearbox with selector elements . . . 81
5.1 Gearbox with selector elements . . . 81
5.2 Position of coupling elements . . . 82
6 Dismantling and assembling gearbox . . . 84
6.1 Dismantling and assembling gearbox . . . 84
6.2 Removing and installing ATF cooler and ATF filler tube . . . 84
6.3 Dismantling and assembling planetary gearbox -Overview- . . . 86
6.4 I - Removing and installing ATF pump up to large sun wheel . . . 87

Protected by copyright. Copyright by Volkswagen AG. Volkswagen AG does not guarantee or accept any liability with respect to the correctness of information in this document. Copying in whole or in part or in any other form is not permitted without the express authorisation by Volkswagen AG.
satelettronica

6.5 II - Removing and installing gearbox housing cover up to input gear 91
6.6 Dismantling and assembling planetary gearbox 96
6.7 Overview of all planetary gearbox adjustments 124
6.8 Adjusting reverse gear brake -B1- 125
6.9 Adjusting 2nd and 4th gear brake -B2- 129
6.10 Adjusting clutch play 132

38 - Gears, Hydraulic controls 139

1 Dismantling and assembling ATF pump 139
1.1 Dismantling and assembling ATF pump 139
2 Dismantling and assembling free-wheel 141
2.1 Dismantling and assembling free-wheel 141
3 Dismantling and assembling 1st to 3rd gear clutch -K1- 143
3.1 Dismantling and assembling 1st to 3rd gear clutch -K1- 143
4 Dismantling and assembling reverse gear clutch -K2- 147
4.1 Dismantling and assembling reverse gear clutch -K2- 147
5 Dismantling and assembling 3rd and 4th gear clutch -K3- 151
5.1 Dismantling and assembling 3rd and 4th gear clutch -K3- 151
6 Dismantling and assembling reverse gear brake 156
6.1 Dismantling and assembling reverse gear brake 156
6.2 Dismantling and assembling reverse gear brake -B1- 156
7 Dismantling and assembling piston for 2nd and 4th gear brake -B2- 160
7.1 Dismantling and assembling piston for 2nd and 4th gear brake -B2- 160
8 Removing and installing valve chest 164
8.1 Removing and installing valve chest 164
8.2 Vehicles up to 06.99 165
8.3 Vehicles from 07.99 170
9 Dismantling and assembling parking lock 175
9.1 Dismantling and assembling parking lock 175

39 - Final drive, Differential 180

1 Renewing oil seals for flanged shafts 180
1.1 Renewing oil seals for flanged shafts 180
1.2 Removing and installing left-hand flange shaft 181
1.3 Removing and installing right-hand flange shaft 184
2 Dismantling and assembling final drive 187
2.1 Dismantling and assembling final drive 187
2.2 Repair overview of final drive 187
2.3 Removing and installing differential 189
2.4 Removing and installing drive pinion 192
2.5 Dismantling and assembling differential 198
3 Adjusting final drive 204
3.1 Adjusting final drive 204
3.2 Overview of adjustments 204
3.3 Adjustments to be performed after replacing individual components 205
3.4 Adjusting differential 206
3.5 Adjusting drive pinion 209
4 Definitions 212
4.1 Definitions 212

satelettronica

00 - Technical data

1 - Identification of gearbox

1.1 - Identification of gearbox

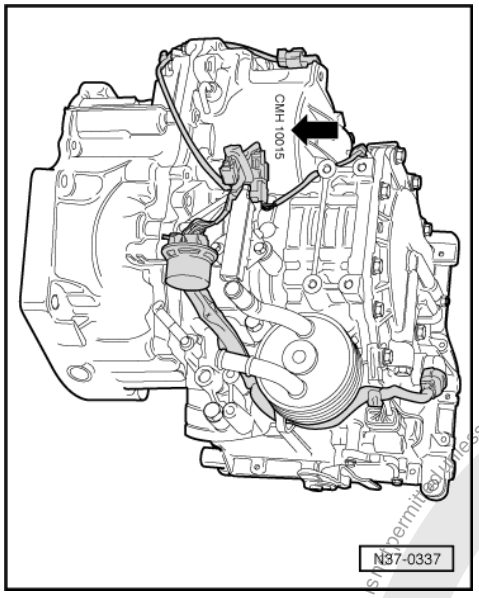

The "4-speed automatic gearbox 001" is installed in the Polo 1995 ‣ in combination with a 4-cylinder engine. Allocation => Page 3 .

Location on gearbox

-> Gearbox code letters and date of manufacture (arrow 1)

Example:

CMH	10	01	5
I	I	I	I
Code letters	Day	Month	Year (1995) of manufacture

The code letters of the gearbox are also given on the vehicle data plates.

Protected by copyright. Copying for private or commercial purposes, in part or in whole, is not permitted unless authorised by Volkswagen AG. Volkswagen AG does not guarantee or accept any liability with respect to the correctness of information in this document. Copyright by Volkswagen AG.
satelettronica

2 - Information on "Automatic gearbox 001"

2.1 - Information on "Automatic gearbox 001"

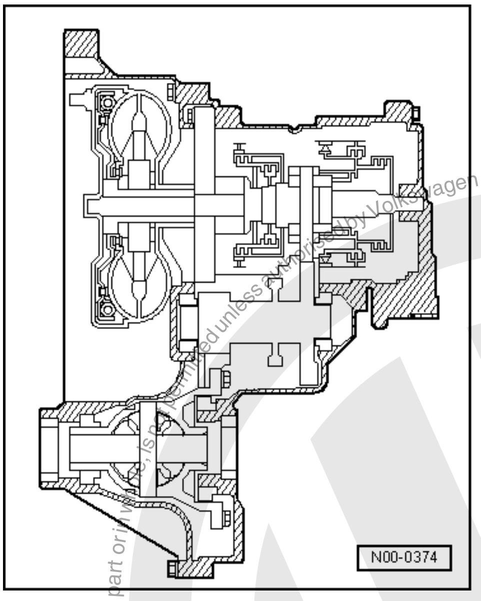

Information on this automatic gearbox can be found in self study programme VW No. 176, 4 speed automatic gearbox 001.

Gearbox

The 4-speed automatic gearbox 001 is equipped with 4 hydraulically activated forward gears. The 3rd and 4th gears when locked-up become mechanically driven gears by cutting-out the torque converter slip.

Control unit -J217-

To be able to offer the driver a sporty ("SPORT" programme) or economic ("ECO" programme) type of driving, there are two programmes available in the control unit.

The control unit switches automatically between these programmes.

Torque converter

The torque converter is equipped with a lock-up clutch. The lock-up clutch is closed dependent on load and speed and drives 3rd and 4th gears mechanically (no slip).

ATF

The ATF is filled for life. The ATF need not be changed within the framework of a service.

If ATF needs to be topped up, then only ATF with a Part number

G 052 990 A2

may be used.

The ATF level in planetary gearbox and final drive is checked and topped up together => Page 76 .

Protected by copyright. Copying for private or commercial purposes, in part or in whole, is not permitted unless authorised by Volkswagen AG. Volkswagen AG does not guarantee or accept any liability with respect to the correctness of information in this document. Copyright by Volkswagen AG.

satelettronica

3 - Code letters, gearbox allocation, ratios, equipment

3.1 - Code letters, gearbox allocation, ratios, equipment

Automatic gearbox			001					
Gearbox	Code letters		CMJ		DPP		CMH	
	Manufactured	from to	01.95 01.98		08.96 06.99		01.95 01.98	
Torque converter	Code letters		AAN		AAN		BAN	
Valve chest	Code letters		IIJ/BAH		IIJ/BAH		IIJ/BAH	
Number of plates			Inner	Outer	Inner	Outer	Inner	Outer
	Clutch -K1-		5	5	5	5	5	5
	Clutch -K2-		2	2	2	2	2	2
	Clutch -K3-		3	5	3	5	4	4
	Brake -B1-		5	4	5	4	6	5
Brake -B2- (brake band) Stepped piston ø in mm for 2nd gear			50 + 31		50 + 31		57 + 36	
Single piston ø in mm for 4th gear			44		44		50	
Allocation	Model		Polo 1995 ▸		Polo 1995 ▸		Polo 1995 ▸	
	Engine		1.4 ltr. - 40 kW 1.4 ltr. - 44 kW		1.4 ltr. - 40 kW 1.4 ltr. - 44 kW		1.6 ltr. - 55 kW	

Gearbox	Code letters		CMJ	DPP	CMH
Ratios	1st gear		2.875	2.875	2.875
	2nd gear		1.510	1.510	1.510
	3rd gear		1.000	1.000	1.000
	4th gear		0.726	0.726	0.726
	Reverse gear		2.656	2.656	2.656
Intermediate drive	No. of teeth	Input gear	49	49	49
		Output gear	53	53	53
	Ratio		1.082	1.082	1.082
Final drive	No. of teeth	Drive pinion	20	20	21
		Gear wheel Final drive	81	81	80
	Ratio		4.050	4.050	3.810
Drive shaft flange with:			Constant velocity joint	Triple roller joint	Constant velocity joint
CAN bus			without CAN bus	without CAN bus	without CAN bus
EPC			without EPC	without EPC	without EPC

Automatic gearbox			001					
Gearbox	Code letters		DPN		EAR		EAT	
	Manufactured	from to	08.96 01.98		06.99 12.00		06.99 12.00	
Torque converter	Code letters		BAN		AAN		AAN	
Valve chest	Code letters		--- / BAH		CCC		CCC	
Number of plates			Inner	Outer	Inner	Outer	Inner	Outer
	Clutch -K1-		5	5	5	5	5	5

Protected by Copyright. Copying for private or commercial purposes, in part or in whole, is not permitted unless authorised by Volkswagen AG. Volkswagen AG does not guarantee or accept any liability with respect to the correctness of information in this document. Copyright by Volkswagen AG.
satelettronica

	Clutch -K2-	2	2	2	2	2	2
	Clutch -K3-	4	4	3	5	3	5
	Brake -B1-	6	5	5	4	5	4
Brake -B2- (brake band) Stepped piston ø in mm for 2nd gear		57 + 36		50 + 31		57 + 36	
Single piston ø in mm for 4th gear		50		44		44	
Allocation	Model	Polo 1995 ▸		Polo 1995 ▸		Polo 1995 ▸	
	Engine	1.6 ltr. - 55 kW		1.4 ltr. - 44 kW		1.4 ltr. - 55 kW	

Gearbox	Code letters		**DPN**	**EAR**	**EAT**
Ratios	1st gear		2.875	2.875	2.875
	2nd gear		1.510	1.510	1.510
	3rd gear		1.000	1.000	1.000
	4th gear		0.726	0.726	0.726
	Reverse gear		2.656	2.656	2.656
Intermediate drive	No. of teeth	Input gear	49	49	49
		Output gear	53	53	53
	Ratio		1.082	1.082	1.082
Final drive	No. of teeth	Drive pinion	21	20	21
		Gear wheel Final drive	80	81	80
	Ratio		3.810	4.050	3.810
Drive shaft flange with:			Triple roller joint	Triple roller joint	Triple roller joint
CAN bus			without CAN bus	with CAN bus	with CAN bus
EPC			without EPC	with EPC	with EPC

Automatic gearbox			**001**					
Gearbox	Code letters		**EHD**		**EHE**		**ERZ**	
	Manufactured	from to	06.99 11.00		06.99 11.00		06.99 11.00	
Torque converter	Code letters		**AAN**		**AAN**		**AAN**	
Valve chest	Code letters		**CCC**		**CCC**		**DAA**	
Number of plates			Inner	Outer	Inner	Outer	Inner	Outer
	Clutch -K1-		5	5	5	5	5	5
	Clutch -K2-		2	2	2	2	2	2
	Clutch -K3-		3	5	3	5	3	5
	Brake -B1-		5	4	5	4	5	4
Brake -B2- (brake band) Stepped piston ø in mm for 2nd gear			50 + 31		57 + 36		57 + 36	
Single piston ø in mm for 4th ger			44		44		44	
Allocation	Model		Polo 1995 ▸		Polo 1995 ▸		Polo 1995 ▸	
	Engine		1.4 ltr. - 44 kW		1.4 ltr. - 55 kW		1.4 ltr. - 55 kW	

Gearbox	Code letters	**EHD**	**EHE**	**ERZ**
Ratios	1st gear	2.875	2.875	2.875
	2nd gear	1.510	1.510	1.510
	3rd gear	1.000	1.000	1.000
	4th gear	0.726	0.726	0.726

Protected by copyright. Copying for private or commercial purposes, in part or in whole, is not permitted unless authorised by Volkswagen AG. Volkswagen AG does not guarantee or accept any liability with respect to the correctness of information in this document. Copyright by Volkswagen AG.
satelettronica

	Reverse gear		2.656	2.656	2.656
Intermediate drive	No. of teeth	Input gear	49	49	49
		Output gear	53	53	53
	Ratio		1.082	1.082	1.082
Final drive	No. of teeth	Drive pinion	20	21	21
		Gear wheel Final drive	81	80	80
	Ratio		4.050	3.810	3.810
Drive shaft flange with:			Constant velocity joint	Constant velocity joint	Constant velocity joint
CAN bus			with CAN bus	with CAN bus	without CAN bus
EPC			with EPC	with EPC	without EPC

Automatic gearbox			001					
Gearbox	Code letters		ESA		EAW			
	Manufactured	from to	06.99 12.00		06.99 12.00			
Torque converter	Code letters		AAN		AAN			
Valve chest	Code letters		DAA		DAA			
Number of plates			Inner	Outer	Inner	Outer	Inner	Outer
	Clutch -K1-		5	5	5	5		
	Clutch -K2-		2	2	2	2		
	Clutch -K3-		3	5	3	5		
	Brake -B1-		5	4	5	4		
Brake -B2- (brake band) Stepped piston ø in mm for 2nd gear			57 + 36		57 + 36			
Single piston ø in mm for 4th gear			44		44			
Allocation	Model		Polo 1995 ▸		Polo 1995 ▸			
	Engine		1.4 ltr. - 55 kW		1.4 ltr. - 55 kW			

Gearbox	Code letters		ESA	EAW
Ratios	1st gear		2.875	2.875
	2nd gear		1.510	1.510
	3rd gear		1.000	1.000
	4th gear		0.726	0.726
	Reverse gear		2.656	2.656
Intermediate drive	No. of teeth	Input gear	49	49
		Output gear	53	53
	Ratio		1.082	1.082
Final drive	No. of teeth	Drive pinion	21	20
		Gear wheel Final drive	80	81
	Ratio		3.810	4.050
Drive shaft flange with:			Triple roller joint	Triple roller joint
CAN bus			without CAN bus	without CAN bus
EPC			without EPC	without EPC

Automatic gearbox	001

Protected by copyright. Copying for private or commercial purposes, in part or in whole, is not permitted unless authorised by Volkswagen AG. Volkswagen AG does not guarantee or accept any liability with respect to the correctness of information in this document. Copyright by Volkswagen AG.
satelettronica

Protected by copyright. Copying for private or commercial purposes, in part or in whole, is not permitted unless authorised by Volkswagen AG. Volkswagen AG does not guarantee or accept any liability with respect to the correctness of information in this document. Copyright by Volkswagen AG.

Gearbox	Code letters				**FMB**		**FMD**	
	Manufactured	from to			12.00		12.00	
Torque converter	Code letters				**ACN**		**ACN**	
Valve chest	Code letters				**CCC**		**CCC**	
Number of plates			Inner	Outer	Inner	Outer	Inner	Outer
	Clutch -K1-				5	5	5	5
	Clutch -K2-				2	2	2	2
	Clutch -K3-				3	5	3	5
	Brake -B1-				5	4	5	4
Brake -B2- (brake band) Stepped piston ø in mm for 2nd gear					50 + 31		57 + 36	
Single piston ø in mm for 4th gear					44		44	
Allocation	Model				Polo 1995 ▸		Polo 1995 ▸	
	Engine				1.4 ltr. - 44 kW		1.4 ltr. - 55 kW	

Gearbox	Code letters		**FMB**	**FMD**
Ratios	1st gear		2.875	2.875
	2nd gear		1.510	1.510
	3rd gear		1.000	1.000
	4th gear		0.726	0.726
	Reverse gear		2.656	2.656
Intermediate drive	No. of teeth	Input gear	49	49
		Output gear	53	53
	Ratio		1.082	1.082
Final drive	No. of teeth	Drive pinion	20	21
		Gear wheel final drive	81	80
	Ratio		4.050	3.810
Drive shaft flange with:			Triple roller joint	Triple roller joint
CAN bus			with CAN bus	with CAN bus
EPC			with EPC	with EPC

Automatic gearbox			001					
Gearbox	Code letters		**FMA**		**FMC**		**FME**	
	Manufactured	from to	12.00		12.00		12.00	
Torque converter	Code letters		**ACN**		**ACN**		**AAN**	
Valve chest	Code letters		**CCC**		**CCC**		**DAA**	
Number of plates			Inner	Outer	Inner	Outer	Inner	Outer
	Clutch -K1-		5	5	5	5	5	5
	Clutch -K2-		2	2	2	2	2	2
	Clutch -K3-		3	5	3	5	3	5
	Brake -B1-		5	4	5	4	5	4
Brake -B2- (brake band) Stepped piston ø in mm for 2nd gear			50 + 31		57 + 36		57 + 36	
Single piston ø in mm for 4th ger			44		44		44	
Allocation	Model		Polo 1995 ▸		Polo 1995 ▸		Polo 1995 ▸	

satelettronica

Engine	1.4 ltr. - 44 kW	1.4 ltr. - 55 kW	1.4 ltr. - 55 kW

Gearbox	Code letters		FMA	FMC	FME
Ratios	1st gear		2.875	2.875	2.875
	2nd gear		1.510	1.510	1.510
	3rd gear		1.000	1.000	1.000
	4th gear		0.726	0.726	0.726
	Reverse gear		2.656	2.656	2.656
Intermediate drive	No. of teeth	Input gear	49	49	49
		Output gear	53	53	53
	Ratio		1.082	1.082	1.082
Final drive	No. of teeth	Drive pinion	20	21	21
		Gear wheel Final drive	81	80	80
	Ratio		4.050	3.810	3.810
Drive shaft flange with:			Constant velocity joint	Constant velocity joint	Constant velocity joint
CAN bus			with CAN bus	with CAN bus	without CAN bus
EPC			with EPC	with EPC	without EPC

Automatic gearbox			001					
Gearbox	Code letters		FMF		FMG			
	Manufactured	from	12.00		12.00			
		to						
Torque converter	Code letters		AAN		AAN			
Valve chest	Code letters		DAA		DAA			
Number of plates			Inner	Outer	Inner	Outer	Inner	Outer
	Clutch -K1-		5	5	5	5		
	Clutch -K2-		2	2	2	2		
	Clutch -K3-		3	5	3	5		
	Brake -B1-		5	4	5	4		
Brake -B2- (brake band) Stepped piston ø in mm for 2nd gear			57 + 36		57 + 36			
Single piston ø in mm for 4th gear			44		44			
Allocation	Model		Polo 1995 ▸		Polo 1995 ▸			
	Engine		1.4 ltr. - 55 kW		1.4 ltr. - 55 kW			

Gearbox	Code letters		FMF	FMG
Ratios	1st gear		2.875	2.875
	2nd gear		1.510	1.510
	3rd gear		1.000	1.000
	4th gear		0.726	0.726
	Reverse gear		2.656	2.656
Intermediate drive	No. of teeth	Input gear	49	49
		Output gear	53	53
	Ratio		1.082	1.082
Final drive	No. of teeth	Drive pinion	21	20

satelettronica
Protected by copyright. Copying for private or commercial purposes, in part or in whole, is not permitted unless authorised by Volkswagen AG. Copyright by Volkswagen AG. Volkswagen AG does not guarantee or accept any liability with respect to the correctness of information in this document.

Gear wheel Final drive	80	81
Ratio	3.810	4.050
Drive shaft flange with:	Triple roller joint	Triple roller joint
CAN bus	without CAN bus	without CAN bus
EPC	without EPC	without EPC

4 - Capacities

4.1 - Capacities

Planetary gearbox and final drive

Capacities	Automatic gearbox 001
Initial filling	5.7 ltr. (filled for life)
Lubricant	ATF Part number: G 052 990 A2

The planetary gearbox and final drive are checked and filled together as described on page 76 .

5 - Repair instructions

5.1 - Repair instructions

The maximum possible care and cleanliness and proper tools are essential to ensure satisfactory and successful gearbox repairs. The usual basic safety precautions also, naturally apply when carrying out vehicle repairs.

A number of generally applicable instructions for individual repair operations, which are otherwise mentioned at various points in the Workshop Manual, are summarized here. They apply to this Workshop Manual.

Special tool

A summary of the special tools used in the Workshop manual precedes each repair procedure and can be found in "Special tools/Workshop equipment" binder.

The catalogue is also available as a CD-ROM, which can be ordered the usual way from Bertelsmann.

Gearbox

When an automatic gearbox is exchanged, the ATF is to be checked and topped up as necessary. Capacities and specifications =>page 8 .

- When installing gearbox, ensure that the dowel sleeves are fitted correctly.

Oil seals

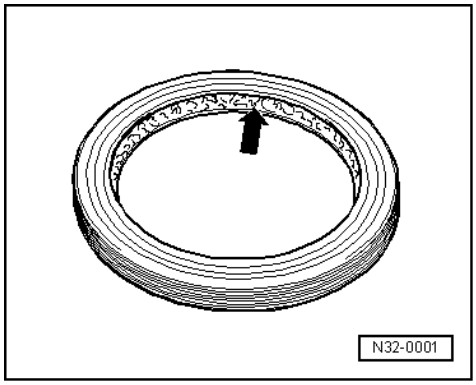

Protected by copyright. Copying for private or commercial purposes, in part or in whole, is not permitted unless authorised by Volkswagen AG. Volkswagen AG does not guarantee or accept any liability with respect to the correctness of information in this document. Copyright by Volkswagen AG.
satelettronica

- -> Radial shaft seals: Pack space between sealing lips with grease before installing.
- Always fit new O-rings.

Sealant

- Thoroughly clean separating surfaces and apply sealant D176 404 A2.
- Note the use by date of the sealant.
- Join components together within 5 minutes of applying sealant.
- Allow sealant to dry for 30 minutes, then fill afterwards with ATF.

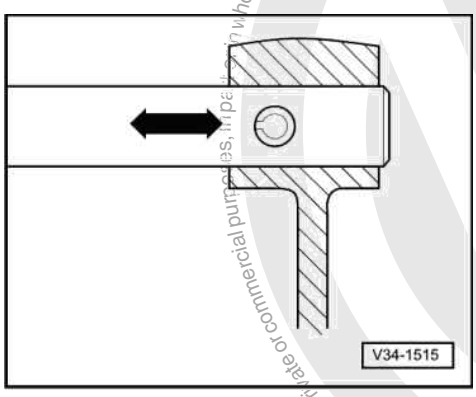

- After installing check ATF level, correct level if necessary.

Locking elements

- Do not overstretch circlips; replace if necessary.
- Circlips must be properly seated in the grooves.

- -> Renew spring pins
  Installation position: Slot longitudinal to line of force.

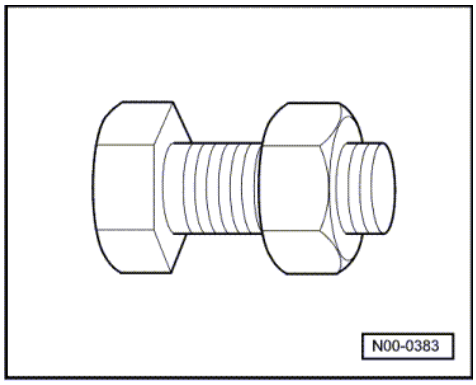

Nuts, bolts

- Nuts and bolts for attaching covers and housings must be slackened and tightened crosswise.
- Do not distort particularly sensitive parts, e.g. valve chest, and loosen or tighten diagonally in stages.
- The tightening torques stated apply to unoiled nuts and bolts.
- Threads of bolts that are secured by locking fluid are to be cleaned with a wire brush. Then insert bolts with AMV 185 100 A1.
- Always renew self-locking nuts and bolts after removal.
- Always renew bolts, which must be tightened further at an angle.

Bearings

- Install bearings in gearbox with ATF. Oil with special care for measuring friction torque.
- Insert axial needle bearing to correct installation position =>Page 96 .
- Heat the inner races of taper roller bearings to approx. 100 °C before inserting.
- Do not interchange the inner and outer races of same size bearings.

Protected by copyright. Copying for private or commercial purposes, in part or in whole, is not permitted unless authorised by Volkswagen AG. Volkswagen AG does not guarantee or accept any liability with respect to the correctness of information in this document. Copyright by Volkswagen AG.
satelettronica

- Always replace taper roller bearings which are mounted on a shaft together and use bearings from a single manufacturer.

Piston rings

- Do not overstretch when removing or installing.

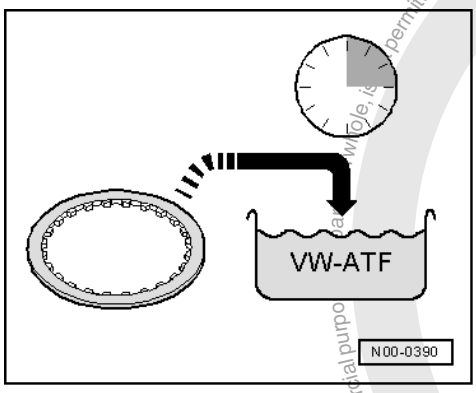

Inner plates

- -> Place new inner plates in ATF fluid for 15 minutes before installing.

Shims

- Measure shims at several points with a micrometer. Different tolerances make it possible to obtain the exact shim thickness required.
- Check for signs of burr and damage. Install only shims which are in perfect condition.

Clutches

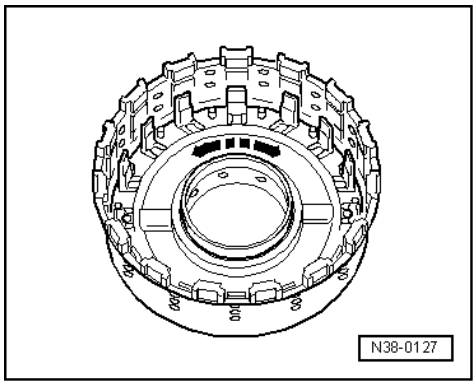

- Clutches can be dismantled, allocate defective parts (e.g. outer and inner plates) according to gearbox code number.
- Moisten sealing lips and sealing rings with ATF before installing the piston.
- -> It must be possible to turn the piston by hand in both directions (arrows) after it has been installed into clutches or brakes.
- If this is not the case, the sealing lips or sealing rings may catch or become damaged.
  - If this defect occurs, remove piston.

Protected copyright. Copyright by Volkswagen AG. Volkswagen AG does not guarantee or accept any liability with respect to the correctness of information in this document. Copying for private or commercial purposes, in whole or in part, is not permitted unless authorised by Volkswagen AG.
satelettronica

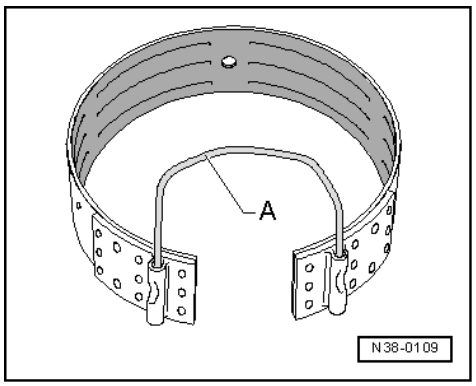

- Check sealing lips or sealing rings for damage, renew if necessary.
- Install piston again and check.

Brakes

- Do not overstretch brake band -B2- using force.

-> Secure brake band, after removal with a locally manufactured wire clip -A- to stop it opening out.

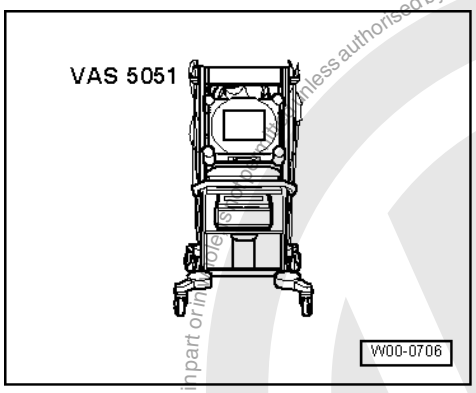

Self-diagnosis

- Before performing repairs to the automatic gearbox, determine the cause of the fault as precisely as possible with the aid of Repair Group 01, Self-diagnosis.

=> Self-diagnosis for automatic gearbox 001; Repair group 01; Function of self-diagnosis Function of self-diagnosis

Protected by copyright. Copying for private or commercial purposes, in part or in whole, is not permitted unless authorised by Volkswagen AG. Volkswagen AG does not guarantee or accept any liability with respect to the correctness of information in this document. Copyright by Volkswagen AG.
satelettronica

32 - Torque converter

1 - Torque converter

1.1 - Torque converter

1.2 - Identification of torque converter

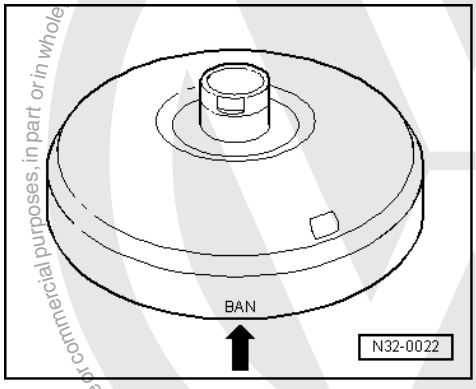

-> There are various torque converters. They are identified by code letters (arrow).

Gearbox/torque converter allocation =>from Page 3

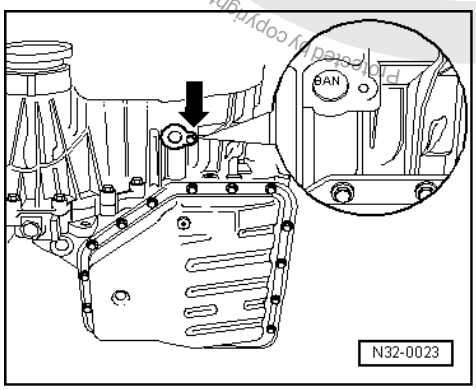

-> Torque converter code letters

(Gearbox installed)

- Remove cover plate (arrow).

Volkswagen AG. Volkswagen AG does not guarantee or accept any liability with respect to the correctness of information in this document. Copyright by Volkswagen AG.
Protected by copyright. Copying for private or commercial purposes, in part or in whole, is not permitted unless authorised by Volkswagen AG.
satelettronica

1.3 - Draining torque converter

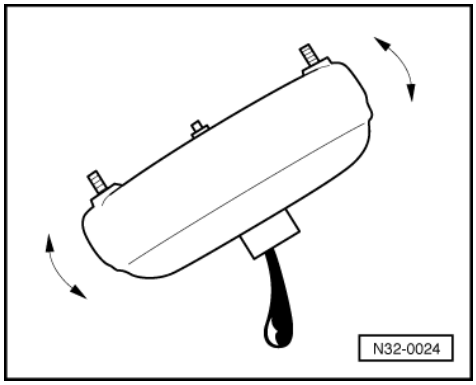

-> If the torque converter has become fouled by abrasion or when performing a major gearbox overhaul, drain the torque converter as follows:

- ATF can be extracted from torque convertor with V.A.G 1358 A and probe V.A.G 1358 A/1.

1.4 - Removing and installing torque converter oil seal

Special tools, testers and auxiliary items

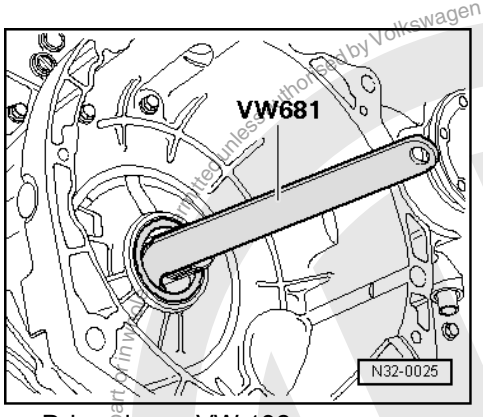

- Drive sleeve VW 192
- VW 681 Extractor lever

-> Removing torque converter oil seal

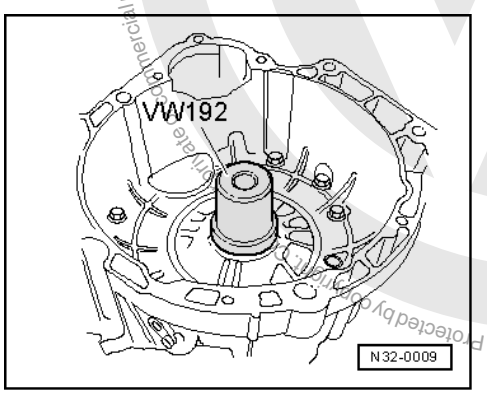

Protected by copyright. Copyright by Volkswagen AG. Volkswagen AG does not guarantee or accept any liability with respect to the correctness of information in this document. Copyright by Volkswagen AG.
satelettronica

-> Driving in torque converter oil seal until flush

1.5 - Installing torque convertor

If it is necessary to fill with ATF, only use ATF with Part number G 052 990 A2.

- Pour 1.5 litres of ATF into the torque converter.
- Install torque converter.

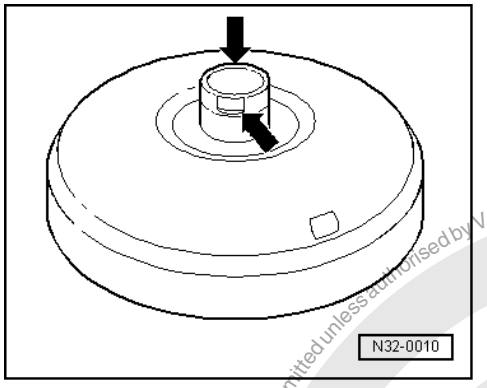

-> ATF pump is driven via the torque converter (arrows).

When installing the torque converter, ensure that drive engages in the recesses in the ATF pump inner wheel.

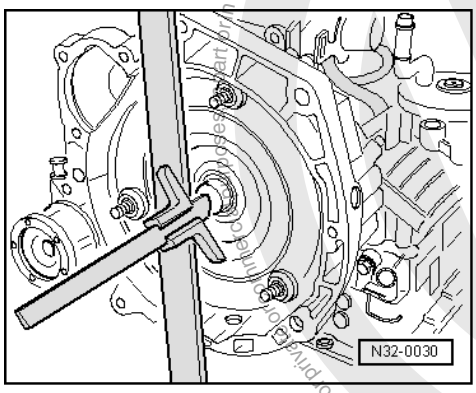

-> The torque converter is correctly installed when the distance between the flange on the gearbox housing and the outer face of the locating pin on the torque converter is 18 mm.

Protected by copyright. Copying for private or commercial purposes, in part or in whole, is not permitted unless authorised by Volkswagen AG. Volkswagen AG does not guarantee or accept any liability with respect to the correctness of information in this document. Copyright by Volkswagen AG.
satelettronica

37 - Controls, Housing

1 - Locations of electrical/electronic components

1.1 - Locations of electrical/electronic components

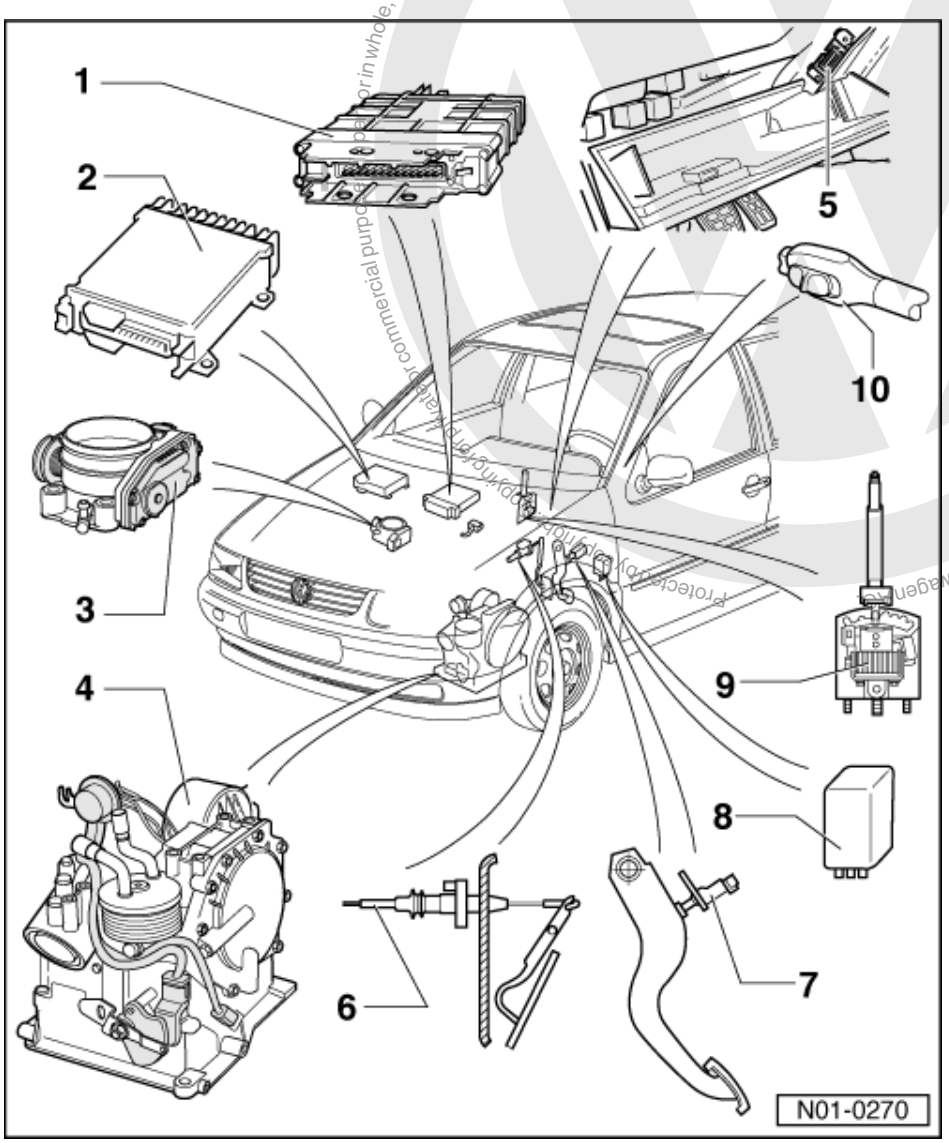

Components on gearbox => Page 24

1.2 - Components in vehicle

1 **Automatic gearbox control unit -J217-**
- Location => Page 21
- Removing => Page 21
- Checked by self-diagnosis

2 **Engine control unit**

satelettronica

- Location and removing and installing =>Fig. 1

If engine or gearbox control units are renewed, the system must be brought to basic setting.

- Perform self-diagnosis and initiate basic setting.

=> Automatic gearbox 001 self-diagnosis; Repair group 01; Performing self-diagnosis; Initiating basic setting
Performing self-diagnosis Initiating basic setting

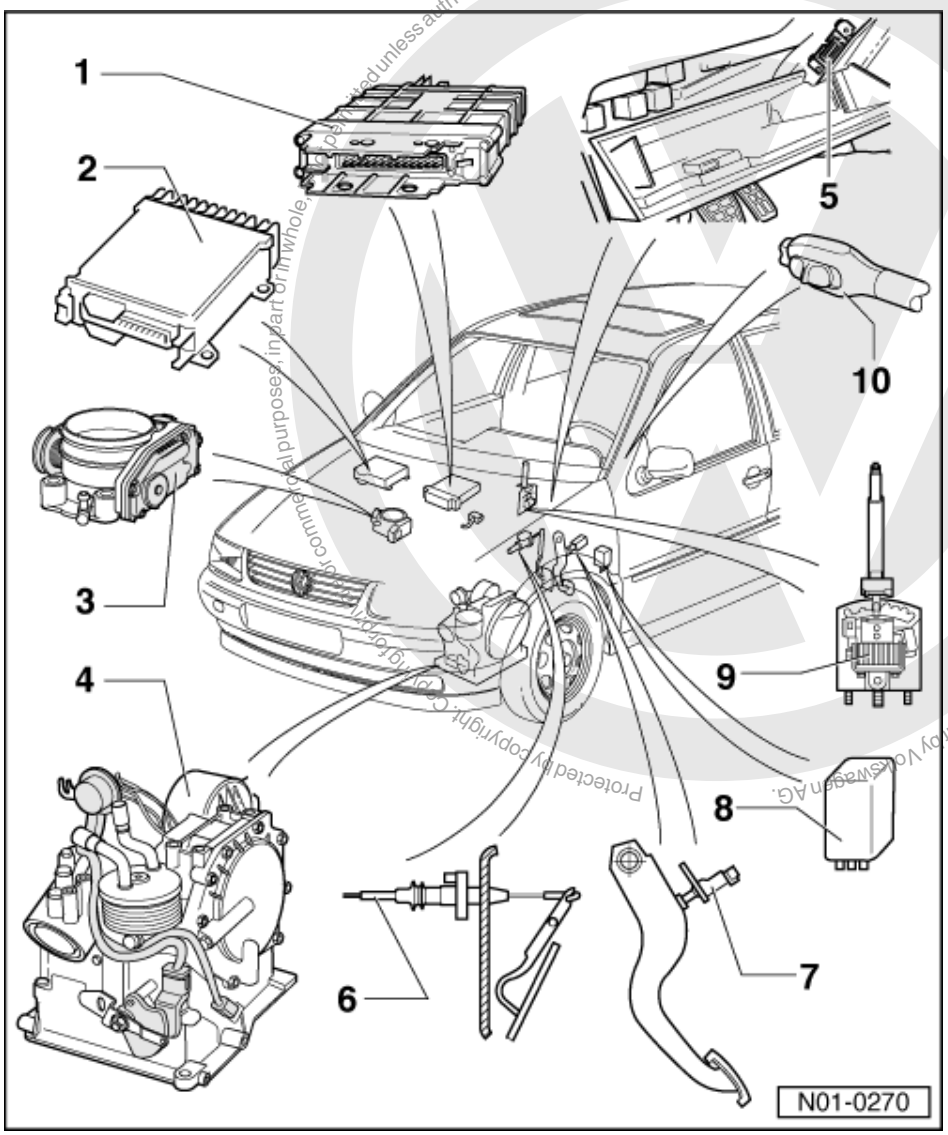

3 Throttle valve potentiometer -G69-, or accelerator position sender -G79-
- Further information => Fig. 2

4 Gearbox
- Electrical/electronic components of the gearbox are described => from page 24

5 Diagnostic connection
Location on vehicles
- up to ‣ 08.97 => page 22
- 09.97 ‣ 09.99=> page 22
- from 10.99 ‣ => page 23

6 Kickdown switch -F8-
- Location, removing and installing => Fig. 3
- Can be checked via electrical check

satelettronica

=> Automatic gearbox 001 self-diagnosis; Repair group 01; Gearbox: Electrical check Gearbox: Electrical check

- Not fitted in vehicles from 07.99

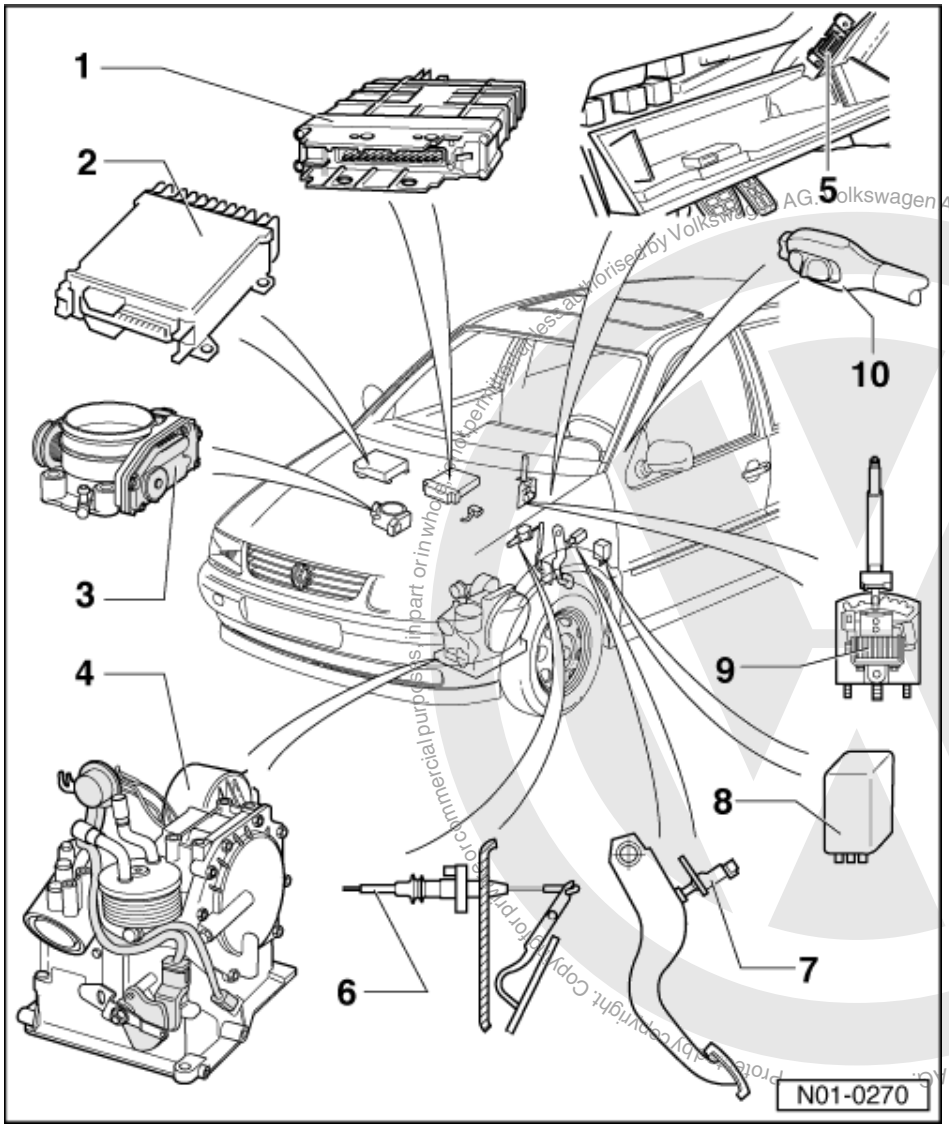

7 Brake light switch -F-
- Location => Fig. 5

8 Starter inhibitor relay -J207-
- Location => Fig. 6

9 Solenoid for selector lever lock -N110-
- Location, removing and installing

=> Repair group 37; Servicing gear selector lever Servicing gear selector lever

10 Cruise control switch -E45-
- Location and removing and installing =>Fig. 4

Selector lever display -Y5- => Page 18

satelettronica

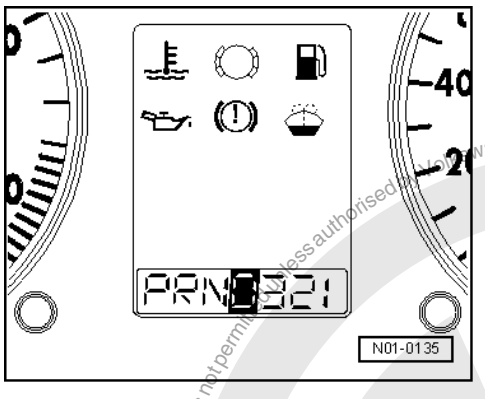

-> Selector lever display -Y5-

Location: Selector lever position display is located in combi-instrument.

Removing and installing selector lever position display.

=> Repair group 90; Removing and installing dash panel insert Removing and installing dash panel insert

In emergency running mode with the control unit functioning, all segments in the selector lever position display in the dash panel will light up.

In emergency running with a defective control unit there will be no display in the selector lever position display.

On vehicles with data bus, the display is controlled by the data bus diagnosis interface via the gearbox control unit.

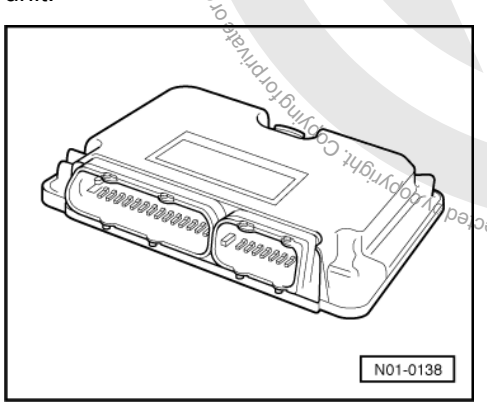

-> Fig.1 Engine control unit

Location: The control unit is located in plenum chamber.

Removing and installing control unit

=> Injection and ignition system; Repair group 24

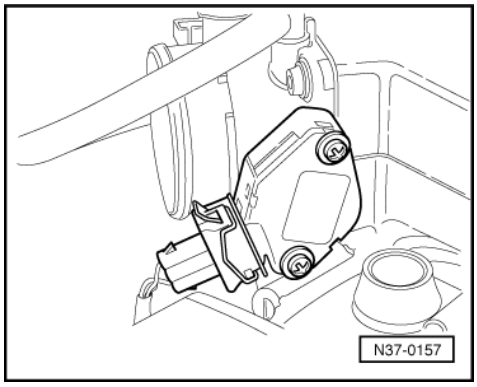

Protected by copyright. Copying for private or commercial purposes, in part or in whole, is not permitted unless authorised by Volkswagen AG. Volkswagen AG does not guarantee or accept any liability with respect to the correctness of information in this document. Copyright by Volkswagen AG.
satelettronica

-> Fig.2 Throttle valve potentiometer -G69- or throttle position sender -G79-

Locations:

The potentiometer is a component part of the throttle valve control part -J338-. It is located on the throttle valve housing (engine).

The throttle position sender -G79- is part of the electronic power control (EPC) and can be found on the foot pedal.

Checking and adjusting or removing and installing throttle valve potentiometer

On vehicles from 10.99, the switch signal comes from the data bus.

=> Repair group 24; depending on engine code depending on engine code

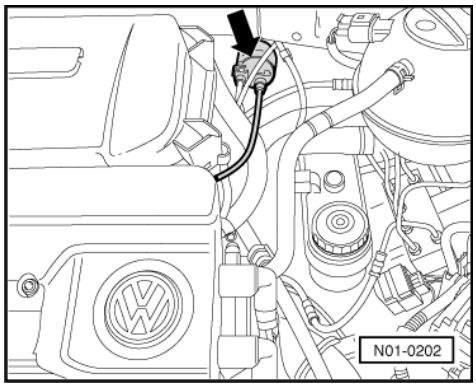

-> Fig.3 Kickdown switch -F8- (only on vehicles without data bus)

Location: Kickdown switch (arrow) is integrated into accelerator cable and is located on bulkhead in engine compartment.

On vehicles from 07.99, the switch signal comes from the data bus.

These vehicles have no switch.

The signal is generated in the "electronic accelerator" (EPC).

Removing and installing kickdown switch

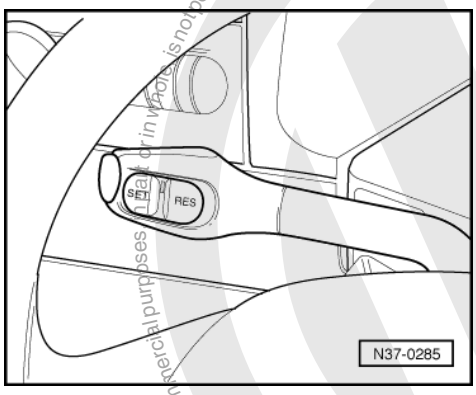

- Remove the accelerator cable to remove and install the kickdown switch, then reinstall cable and adjust.

satelettronica
Protected by copyright. Copying for private or commercial purposes, in part or in whole, is not permitted unless authorised by Volkswagen AG. Volkswagen AG does not guarantee or accept any liability with respect to the correctness of information in this document. Copyright by Volkswagen AG.

=> Repair group 20; Servicing accelerator mechanism; Adjusting accelerator cable Servicing accelerator mechanism Adjusting accelerator cable

-> Fig.4 Cruise control system switch -E45-

Location: Cruise control switch is located on steering column switch.

Removing and installing cruise control switch

=> Electrical system; Repair group 94

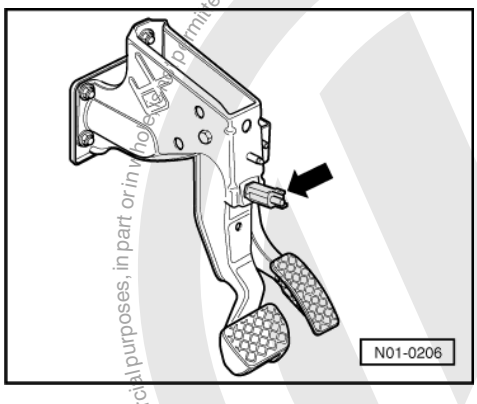

or

=> Electrical system; Repair group 96

On vehicles from 07.99, the switch signal comes from the data bus.

-> Fig.5 Brake light switch -F-

Location: Brake light switch (arrow) is located on pedal cluster.

Removing and installing brake light switch

=> Running gear self-diagnosis for ABS; Repair group 01; Electrical/electronic components and Fitting locations. Electrical/electronic components and Fitting locations.

On vehicles from 07.99, the switch signal comes from the data bus.

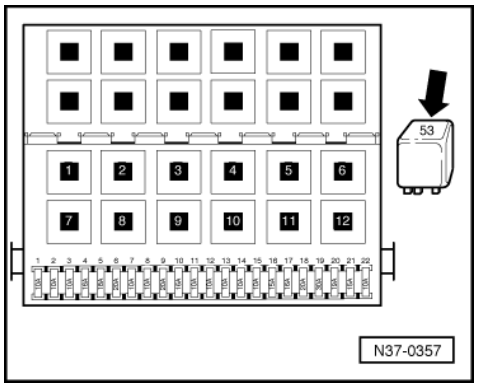

satelettronica

Protected by copyright. Copying for private or commercial purposes, in part or in whole, is not permitted unless authorised by Volkswagen AG. Volkswagen AG does not guarantee or accept any liability with respect to the correctness of information in this document. Copyright by Volkswagen AG.

-> Fig.6 Starter inhibitor relay -J207-

Location: The relay is located on relay carrier behind the fuse holder below the dash panel.
Relay is marked with number "53" (arrow).
Assignment
=> "Current flow diagrams, Electrical fault finding and Fitting locations" binder, Polo 1995 ‣

- The relay can be identified via connecting cable colours.

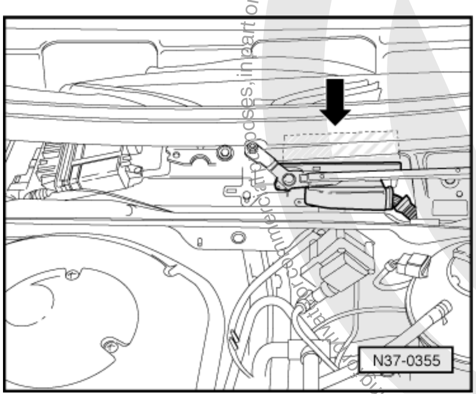

Location of control unit for automatic gearbox -J217-

-> The control unit (arrow) is located in the plenum chamber.

Removing control unit

- Switch off ignition, open bonnet.
- Remove wiper arms and cowl panel:

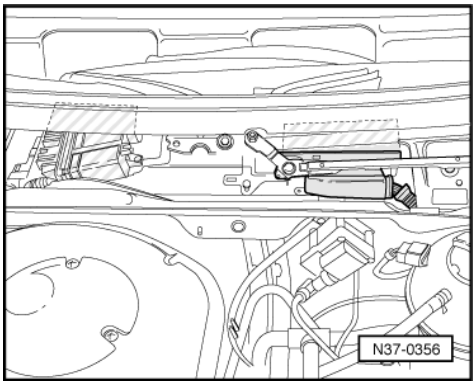

=> Electrical system; Repair group 94; Windscreen wiper system; Removing and installing windscreen wiper system Windscreen wiper system Removing and installing windscreen wiper system

- Partially remove/install wiper rods.
- -> Remove engine control unit.

Location: The control unit is located in plenum chamber.
=> Repair group 24

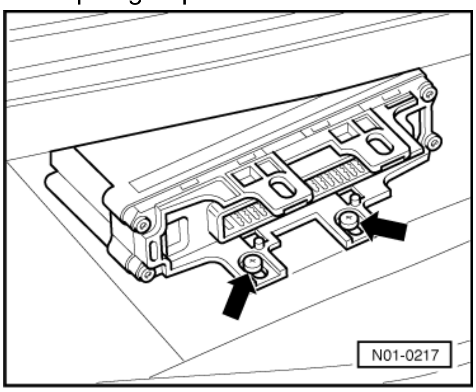

satelettronica

- Release multi-pin connector and pull off control unit.
- -> Remove screws -arrows-.
- Remove control unit.

Installing control unit

Installation is performed in the reverse order.

- Perform self-diagnosis and initiate basic setting.

=> Automatic gearbox 001 self-diagnosis; Repair group 01; Performing self-diagnosis; Initiating basic setting
Performing self-diagnosis Initiating basic setting

1.3 - Locations of diagnosis connections

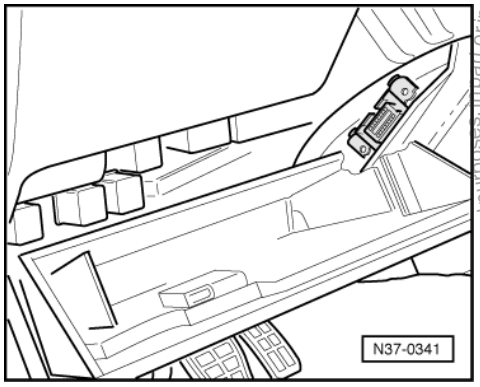

-> For vehicles up to ▸08.97

The self-diagnosis connection is located behind the shelf on the driver's side.

- Open and unhook shelf on driver's side.

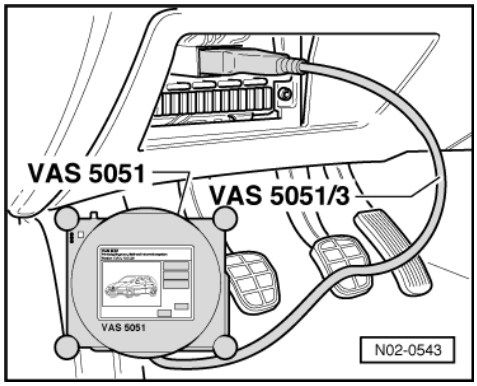

-> For vehicles 09.97 ▸09.99

The self-diagnosis connection is located on the fuse strip in front left footwell

- Remove cover in front of fuse strip

Protected by copyright. Copying for private or commercial purposes, in part or in whole is not permitted unless authorised by Volkswagen AG. Volkswagen AG does not guarantee or accept any liability with respect to the correctness of information in this document. Copyright by Volkswagen AG.
satelettronica

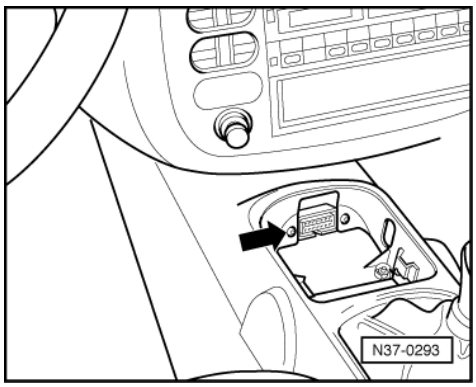

-> For vehicles from 10.99 ▸

Location: The diagnostic connection -arrow- is located in centre console.

- Lever cover or ashtray housing out from centre console.

1.4 - Components on gearbox

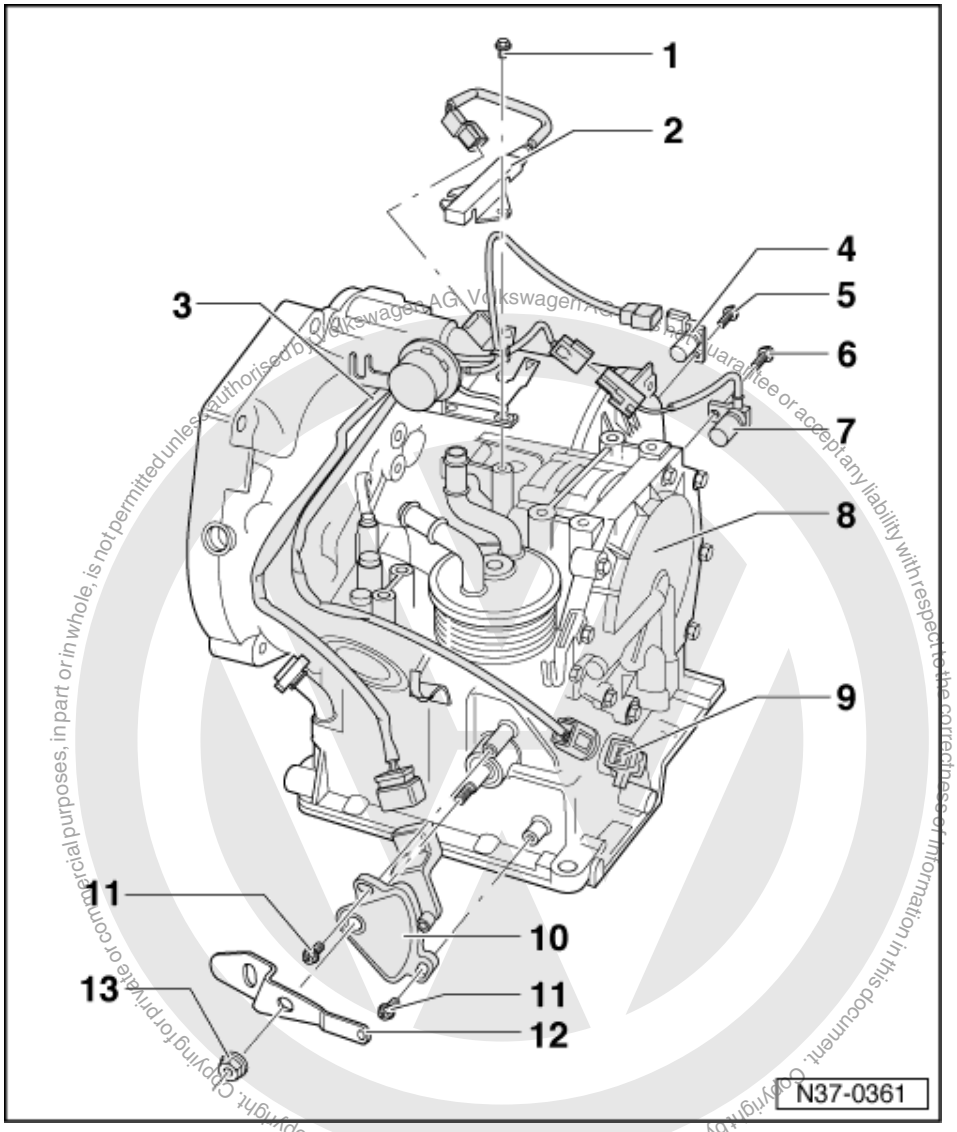

satelettronica

1 Bolt, 6 Nm
2 Series resistance -N207-
- Location => Fig. 4
- Can be checked electrically and by measured value block

=> Self-diagnosis for automatic gearbox 001; Repair group 01; Performing self-diagnosis; Reading measured value block Performing self-diagnosis Reading measured value block
- Pull off connector => Page 28
- Not on vehicles from 07.99

3 Wiring harness
4 Road speed sender -G68-
- Connector direct on sender
- Location and removing and installing =>Fig. 2
- Checked by self-diagnosis

=> Automatic gearbox 001 self-diagnosis; Repair group 01; Performing self-diagnosis Performing self-diagnosis

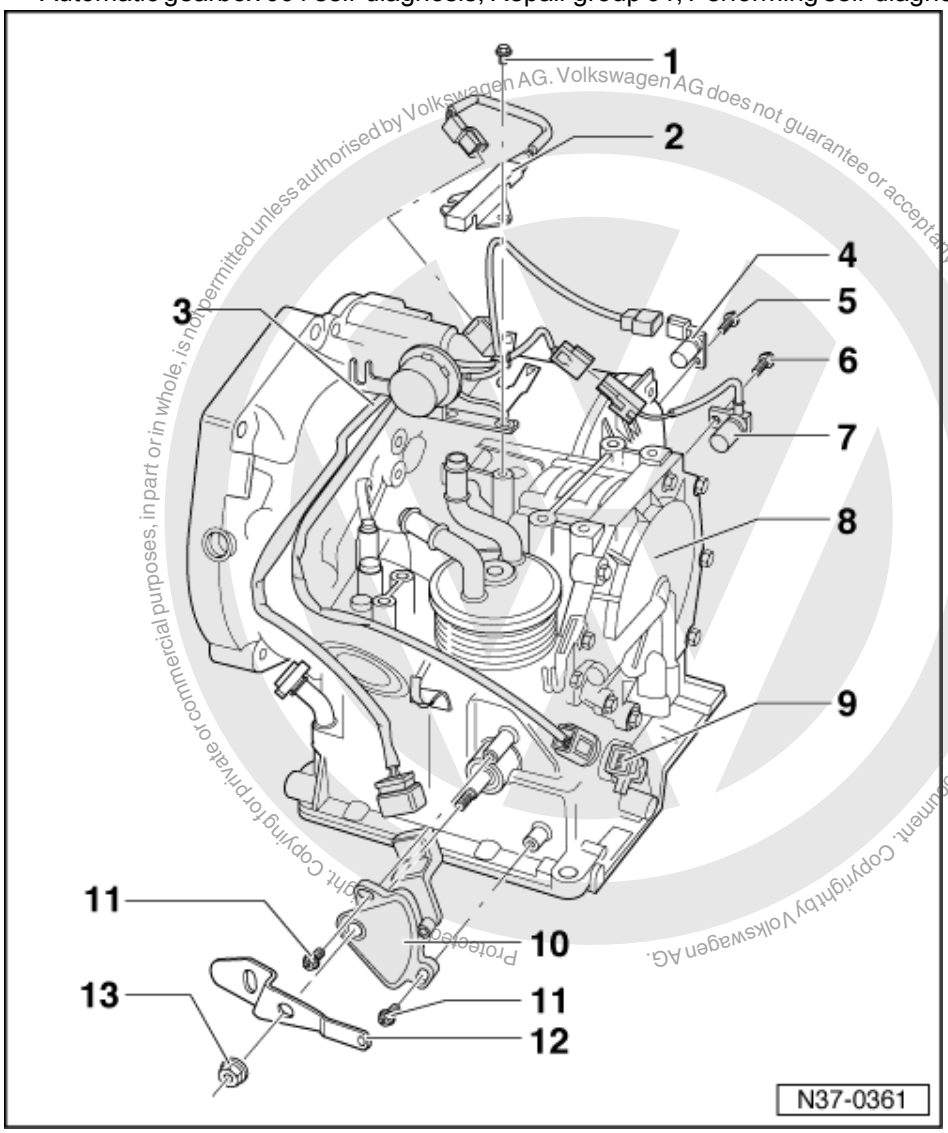

5 Bolt, 6 Nm
6 Bolt, 6 Nm
7 Gearbox speed sender -G38-
- With connection cable
- Location and removing and installing =>Fig. 2

Protected by copyright. Copying for private or commercial purposes, in part or in whole, is not permitted unless authorised by Volkswagen AG. Volkswagen AG does not guarantee or accept any liability with respect to the correctness of information in this document. Copyright by Volkswagen AG.
satelettronica

- Checked by self-diagnosis

=> Automatic gearbox 001 self-diagnosis; Repair group 01; Performing self-diagnosis Performing self-diagnosis

8 Gearbox
9 Wiring harness
- For solenoid valves and gearbox oil temperature (ATF) sender -G93-
- Location, removing and installing =>Fig. 26

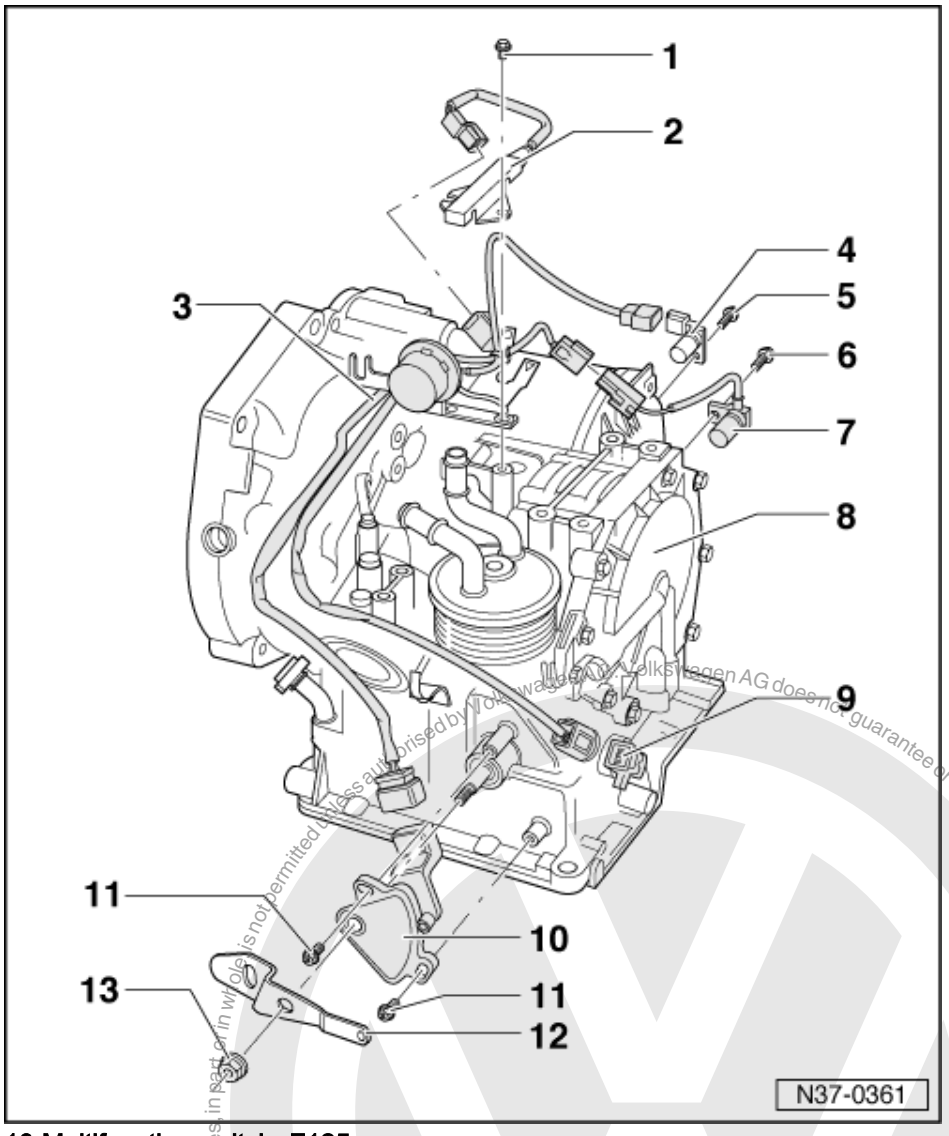

10 Multifunction switch -F125-
- Adjusting => Fig. 3
- Checked by self-diagnosis

=> Automatic gearbox 001 self-diagnosis; Repair group 01; Performing self-diagnosis Performing self-diagnosis

11 Combi-bolt
- Tightening torque => Fig. 3

12 Lever
- For selector shaft

13 Nut, 17 Nm

satelettronica
Protected by copyright. Copying for private or commercial purposes, in part or in whole, is not permitted unless authorised by Volkswagen AG. Volkswagen AG does not guarantee or accept any liability with respect to the correctness of information in this document. Copyright by Volkswagen AG.

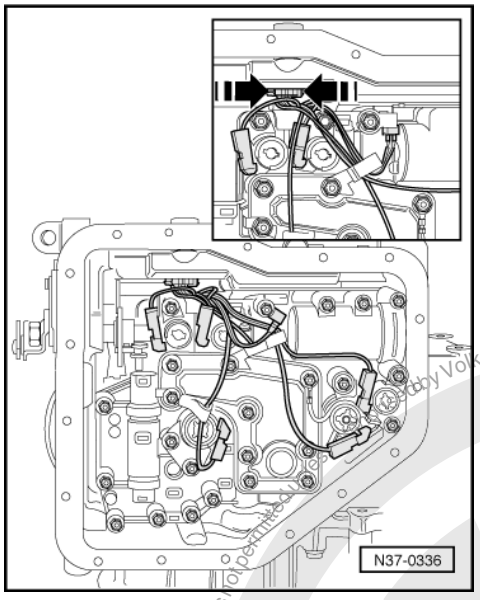

-> Fig. 1 Solenoid valve and gearbox oil temperature (ATF) sender -G93- wiring harness

Location: The wiring harness is located in the oil pan under the valve chest.

Removing and installing wiring harness

The wiring harness can be changed with the gearbox installed and without removing the valve chest.

- Drain ATF => page 80 .
- Remove sump => from page 164 .
- Separate connector at gearbox.
- Release connector -arrows- and take out from gearbox housing.

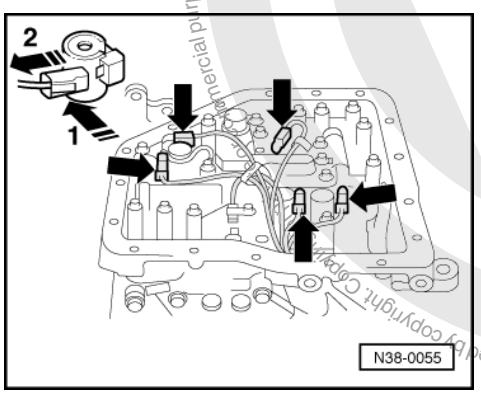

- -> Separate solenoid valve connector by pressing the tab -1- and pulling off -2-.

Installation is performed in the reverse order.

Sequence for dismantling and assembling => from page 86 . Observe instructions for dismantling and assembling planetary gearbox.

The cable colours are the same as the relevant solenoid valve colours.

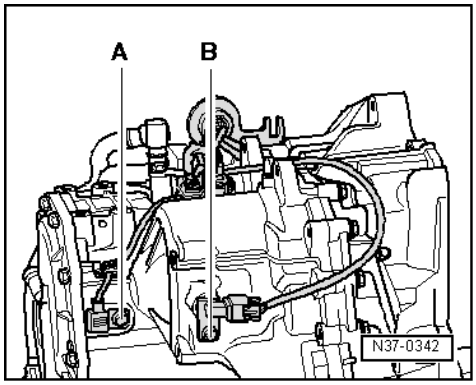

Protected by copyright. Copyright by Volkswagen AG. Volkswagen AG does not guarantee or accept any liability with respect to the correctness of information in this document. Copyright by Volkswagen AG.
satelettronica

-> Fig.2 A - Gearbox speed sensor -G38-

B - Road speed sender -G68-

Location: The road speed sender is located on top of gearbox.

A -G38-

B -G68-

Removing and installing sender

- Pull connector off sender.
- Remove bolt and pull sender out.

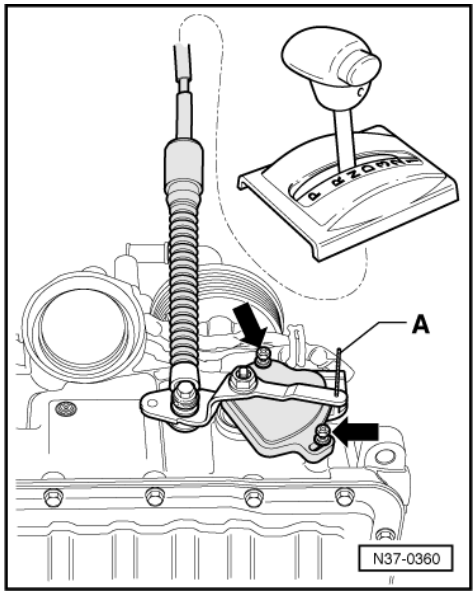

- Renew seal.

Installation is performed in the reverse order.

- Tighten bolt to 6 Nm.

-> Fig.3 Adjusting multi-function switch

Prerequisites

- Selector lever cable adjustment OK.

Vehicles from 06.99 => page 35
Vehicles from 07.99 => page 35

- Selector lever at "N"
- Bolts (arrow) loosened

- Insert 4 mm drill -A- through selector lever and into adjusting hole of multi-function switch.

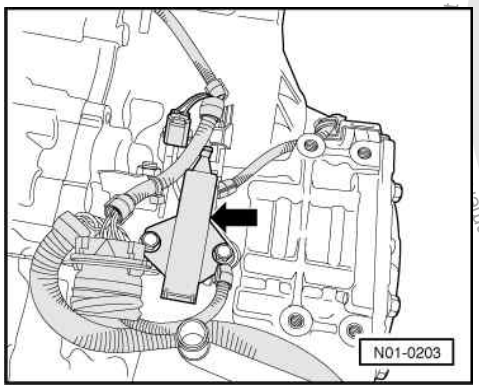

Protected by copyright. Copying for private or commercial purposes, in whole or in part, is not permitted unless authorised by Volkswagen AG. Volkswagen AG does not guarantee or accept any liability with respect to the correctness of information in this document. Copyright by Volkswagen AG.
satelettronica

- Tighten bolts (arrows) on multi-function switch in this position to 3 Nm.
- Remove drill.

-> Fig.4 Series resistance -N207-

Location: The resistance is located on top of the gearbox.

Not fitted in vehicles from 07.99.

Pulling off complete connector of series resistor

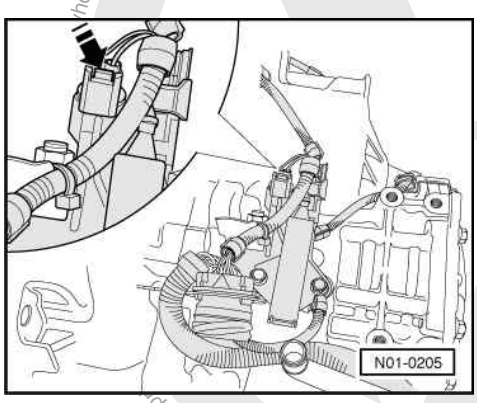

Series resistor connector must be pulled off to measure resistance.

- -> Press lug in direction of arrow.
- Pull connector off retainer on gearbox.

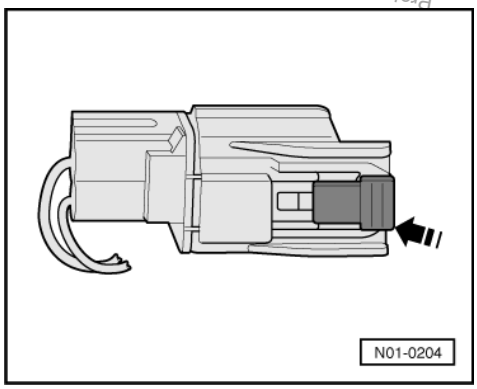

- -> Press lug in direction of arrow.
- Separate connector.

2 - Servicing gear change mechanism

2.1 - Servicing gear change mechanism

Warning!
Before working on engine when it is running, move selector lever into position "P" and apply handbrake.

Protected by copyright. Copyright by Volkswagen AG.
Copyright by Volkswagen AG does not guarantee or accept any liability with respect to the correctness of information in this document.
satelettronica

2.2 - Checking shift mechanism

Selector lever in "P" position and ignition switched on:

- Brake pedal not depressed:

  Selector lever is locked and cannot be shifted out of "P" position. Solenoid for selector lever lock blocks selector lever.

- Brake pedal depressed:

  Solenoid for selector lever lock releases selector lever. It is possible to shift into a driving gear.

Selector lever in "N" position and ignition switched on:

- Brake pedal not depressed:

  Selector lever is locked and cannot be shifted out of "N" position. Solenoid for selector lever lock blocks selector lever.

- Brake pedal depressed:

  Solenoid for selector lever lock releases selector lever. It is possible to shift into a driving gear.

- The starter must not operate in the selector lever positions "1", "2", "3", "D" and "R".
- On right-hand drive vehicles the starter must only operate in selector lever positions "P" and "N" when the locking button in the selector lever handle is not pressed.
- When travelling at speeds above 5 km/h and shifting into selector lever position "N", solenoid for selector lever lock must not engage and block selector lever. Selector lever can be shifted into a driving gear.
- When travelling at speeds below 5 km/h (almost stopped) and shifting into selector lever position "N", solenoid for selector lever lock must not engage until after approx. 1 sec. Selector lever cannot be shifted out of "N" position until brake pedal is depressed.

2.3 - Checking operation of the ignition key withdrawal lock

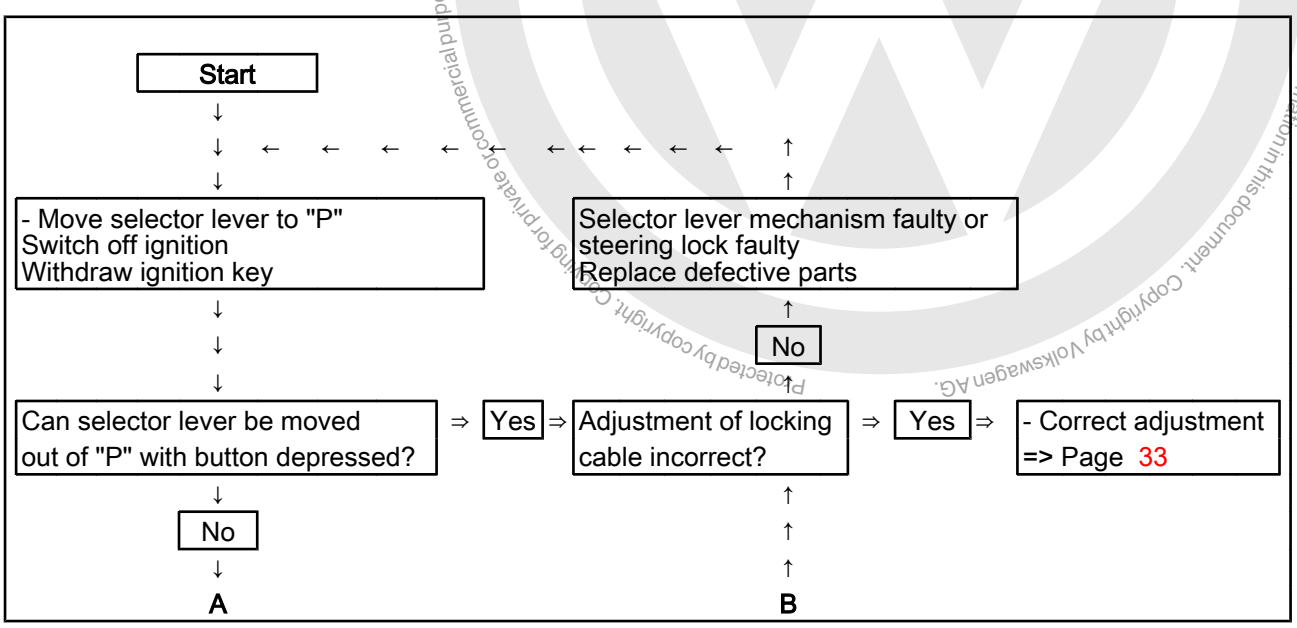

satelettronica

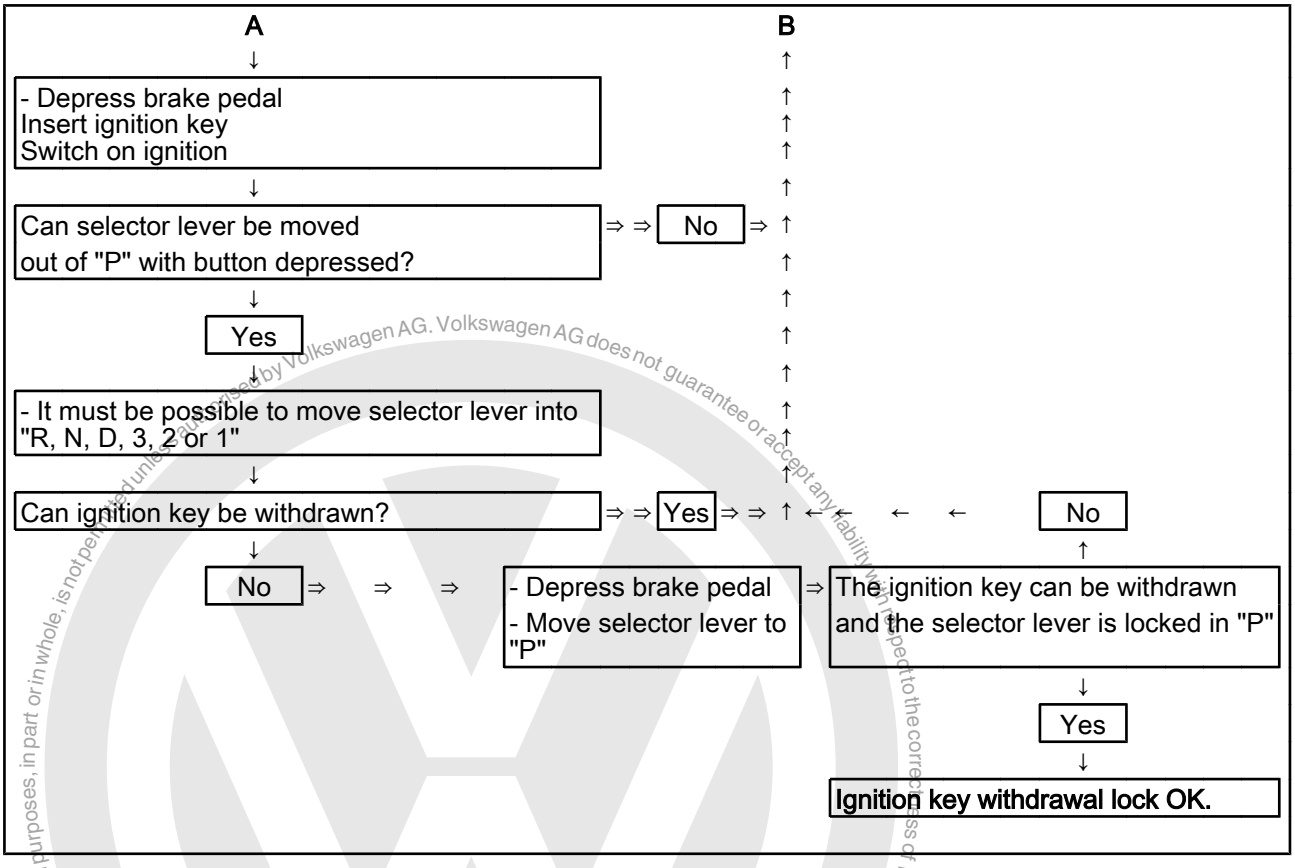

2.4 - Removing and installing locking cable on vehicles with ignition key removal lock

- Locking cable must not be kinked.
- Adjust locking cable after installing => Page 33 .

Removing

- Remove selector lever handle (vehicles from 07.99 => from page 62).
- Remove cover with cover strip.

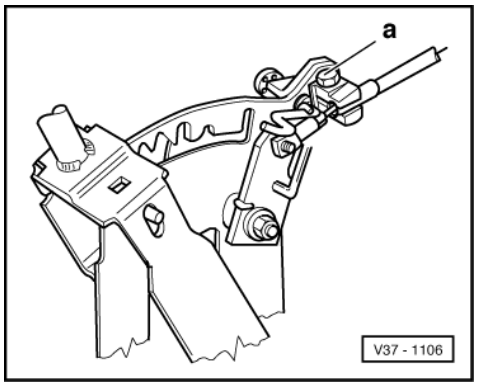

Vehicles up to 06.99

- Remove central console.

Protected by copyright. Copyright by Volkswagen AG.
Copying for commercial purposes, in part or in whole, is not permitted unless authorised by Volkswagen AG. Volkswagen AG does not guarantee or accept any liability with respect to the correctness of information in this document.
satelettronica

=> General body repairs; Repair Group 70.

- Loosen cable anchorage screw -a-, take locking cable out of locking lever and pull out of cable anchorage.

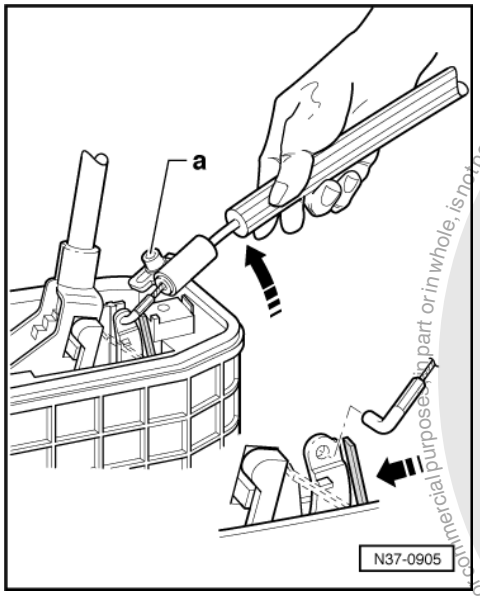

Vehicles from 07.99

- -> Unscrew support bracket bolt -a-, bend securing clip backwards and remove locking cable upwards out of locking lever.

Continued for all vehicles

- Remove steering wheel if necessary.
- Remove ignition switch trim.

=> Running gear; Repair group 48; Removing and installing column tube with steering column Removing and installing column tube with steering column

and

=> Electrical system; Repair group 94; Servicing steering column switch Servicing steering column switch

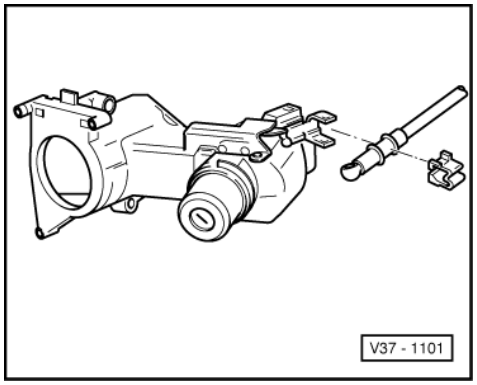

- -> Push locking cable clip out of ignition switch support bracket and remove locking cable from ball head.
- Take out locking cable.

Protected by copyright. Copying for private or commercial purposes, in part or in whole, is not permitted unless authorised by Volkswagen AG. Volkswagen AG does not guarantee or accept any liability with respect to the correctness of information in this document. Copyright by Volkswagen AG.
satelettronica

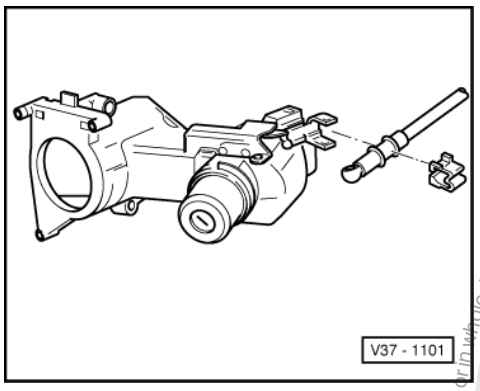

Installing

Ensure proper routing of locking cable when installing.

- -> Mount locking cable clip on locking cable first.
- Press locking cable onto ball head.
- Press locking cable with clip into ignition/starter switch support bracket.
- Route locking cable along steering column.
- Adjust locking cable on cable anchorage of selector lever => Page 33 .
- Install central console.

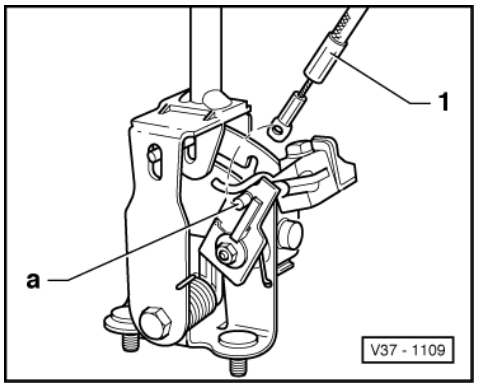

- Install cover with indicator and selector lever handle.
- Attach ignition/starter switch trim pieces and install steering wheel if removed.

Vehicles from 07.99

- -> Mount locking cable eye -1- on locking lever -a-.

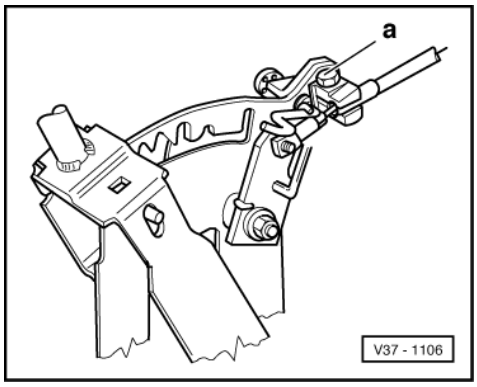

- -> Install locking cable in cable anchorage.
- Do not tighten screw -a- until after adjusting locking cable.

Protected by copyright. Copying for private or commercial purposes, in part or in whole, is not permitted unless authorised by Volkswagen AG. Volkswagen AG does not guarantee or accept any liability with respect to the correctness of information in this document. Copyright by Volkswagen AG.
satelettronica

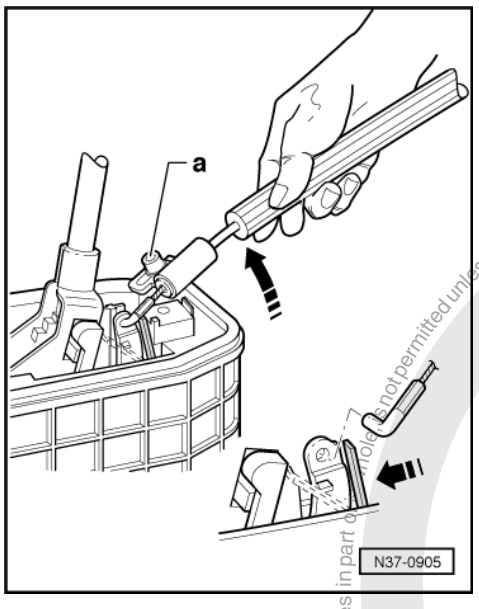

Vehicles from 07.99

- -> Bend securing clip backwards and fit locking cable in locking lever.
- Do not tighten screw -a- until after adjusting locking cable.

Continued for all vehicles

- Adjusting locking cable => Page 33 .

Adjusting locking cable

Vehicles from 07.99 => page 35 .

Vehicles up to 06.99

Locking cable must always be adjusted in installation position.

- Shift selector lever into "1" position.
- Turn ignition key to right (starting position) and release.

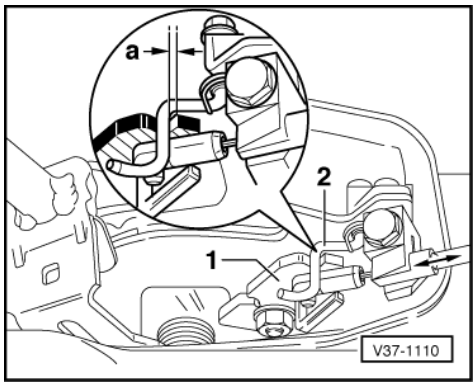

- -> Adjust clearance to 0.7 mm between lever -1- and locking pin -2- by sliding locking cable casing.

Dimension a = 0.7 mm

- Tighten locking cable anchorage screw in this position to 6 Nm.

Protected by copyright. Copying for private or commercial purposes in part or whole is not permitted unless authorised by Volkswagen AG. Volkswagen AG does not guarantee or accept any liability with respect to the correctness of information in this document. Copyright by Volkswagen AG.
satelettronica

- Checking operation of the ignition key withdrawal lock => Page 29 .

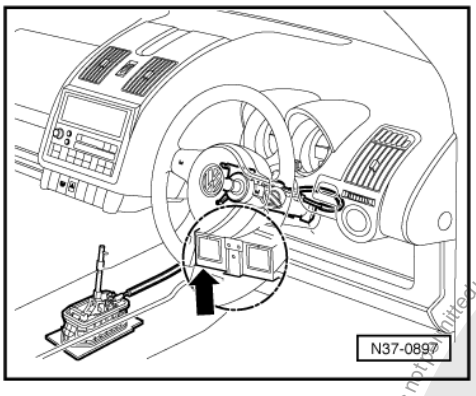

Vehicles from 07.99

Locking cable must always be adjusted in installation position.

-> The locking cable can be found above the carpet between plastic trim of instrument panel -arrow- and carpet.

- Selector lever in "P" position.
- Loosen locking cable on mounting bracket of selector mechanism.
- Turn ignition key to right (starting position) and release.

If the locking cable is fitted correctly, it will adjust itself automatically.

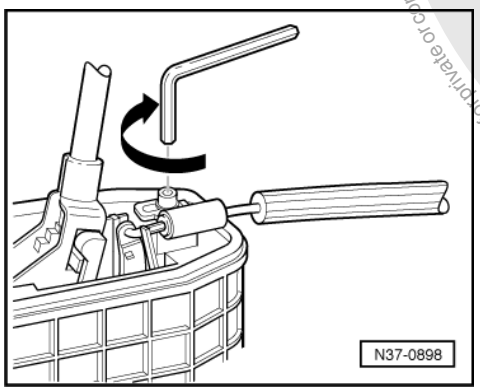

- -> Tighten bolt from locking cable mounting bracket to 6 Nm.
- Checking operation of the ignition key withdrawal lock => Page 29 .

2.5 - Checking and adjusting selector lever cable on vehicles up to 06.99

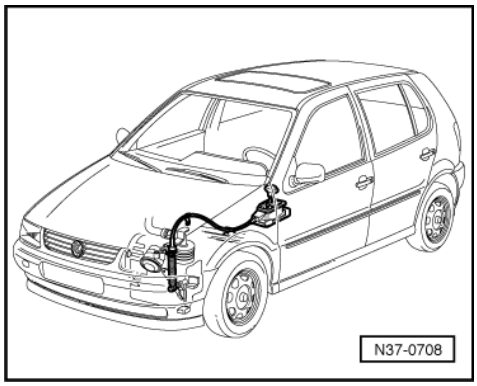

Protected by copyright. Copying for private or commercial purposes, in part or in whole, is not permitted unless authorised by Volkswagen AG. Volkswagen AG does not guarantee or accept any liability with respect to the correctness of information in this document. Copyright by Volkswagen AG.
satelettronica

Vehicles from 07.99 => page 35 .

Checking

- Remove selector lever cable combi-bolt from lever/selector shaft.
- Move selector lever from "P" to "1".

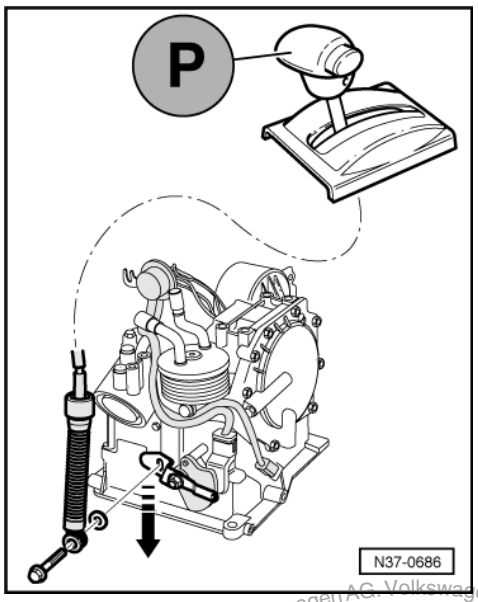

- Selector lever mechanism and selector lever cable must move freely. If necessary renew selector lever cable or service selector lever mechanism.

Always renew selector lever locking washer at gearbox lever after dismantling.

Adjusting

- Selector lever in "P" position.
- Raise vehicle.
- Loosen selector lever cable combi-bolt on selector shaft lever.
- Bring selector shaft lever in position "P" on gearbox. Locking lever must engage in park lock wheel, both front wheels blocked.
- In this position tighten selector shaft lever combi-bolt to 23 Nm.
- Checking multi-function switch adjustment and adjust if necessary.
- Checking multi-function switch adjustment and adjusting if necessary =>Page 27 .

2.6 - Checking and adjusting selector lever cable on vehicles from 07.99

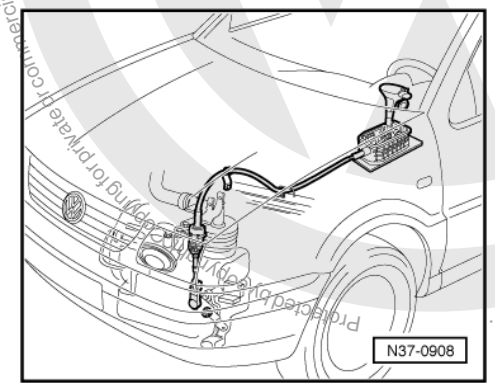

Copyright by Volkswagen AG. Volkswagen AG does not guarantee or accept any liability with respect to the correctness of information in this document. Copying for private or commercial purposes, in part or in whole, is not permitted unless authorised by Volkswagen AG.
Protected by copyright.
satelettronica

Checking

- Selector lever in "P" position.
- Remove selector lever cable from selector shaft lever.
- Move selector lever from "P" to "1".

• Selector lever mechanism and selector lever cable must move freely. If necessary renew selector lever cable or service selector lever mechanism.

Always renew selector lever locking washer at gearbox lever after dismantling.

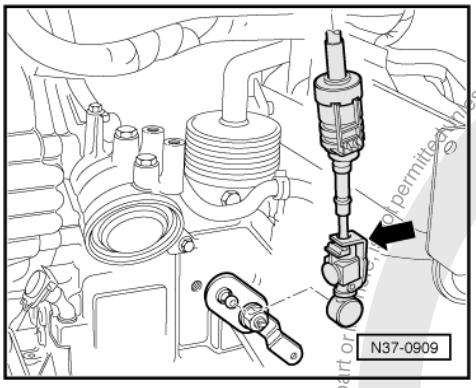

Adjusting

- Bring selector shaft lever in position "P" on gearbox. Locking lever must engage in park lock wheel, both front wheels blocked.
- Selector lever in "P" position.
- -> First open securing tab -arrow-.

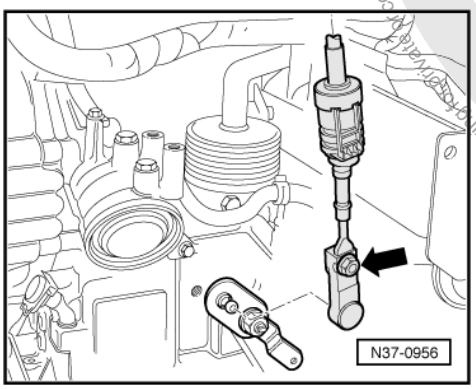

- -> On some cables the adjusting nut -arrow- must be loosened.
- Then push selector lever cable onto selector shaft lever.
- Press securing tab in on selector lever cable (lock in place).
- Tighten adjusting nut to 13 Nm (if fitted).
- Push button of selector lever handle and pull back lever 5 mm. Release selector lever.

The selector lever must lock in position "P" automatically.

- Shift selector lever into position "N". Push and pull 5 mm respectively (check as with "P").

The selector lever must lock in position "N" automatically.

This completes the adjusting procedure.

- If necessary, repeat the adjusting procedure or service the selector mechanism => page 59 .

Protected by copyright. Copyright by Volkswagen AG.
Copyright by Volkswagen AG. Volkswagen AG does not guarantee or accept any liability with respect to the correctness of information in this document. Copying for private or commercial purposes, in part or in whole, is not permitted unless authorised by Volkswagen AG.
satelettronica

2.7 - Dismantling and assembling selector mechanism on vehicles without key withdrawal lock up to 06.99

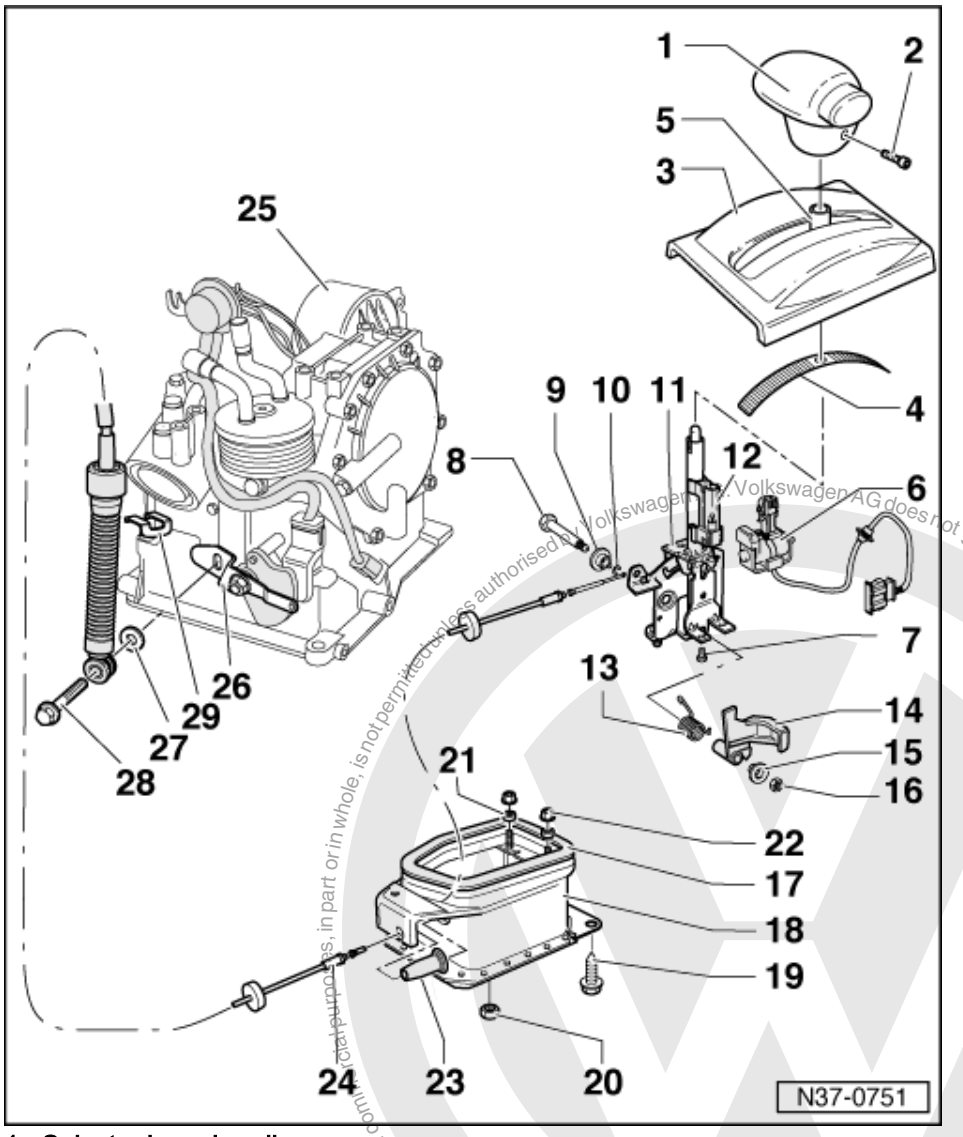

1 Selector lever handle
2 Set screw, 1.5 Nm
3 Cover
- With selector indicator

4 Cover strip
- Insert into cover -Fig. 3 -

5 Protective sleeve for selector lever

Protected by copyright. Copying for private or commercial purposes, in part or in whole, is not permitted unless authorised by Volkswagen AG. Volkswagen AG does not guarantee or accept any liability with respect to the correctness of information in this document. Copyright by Volkswagen AG.
satelettronica

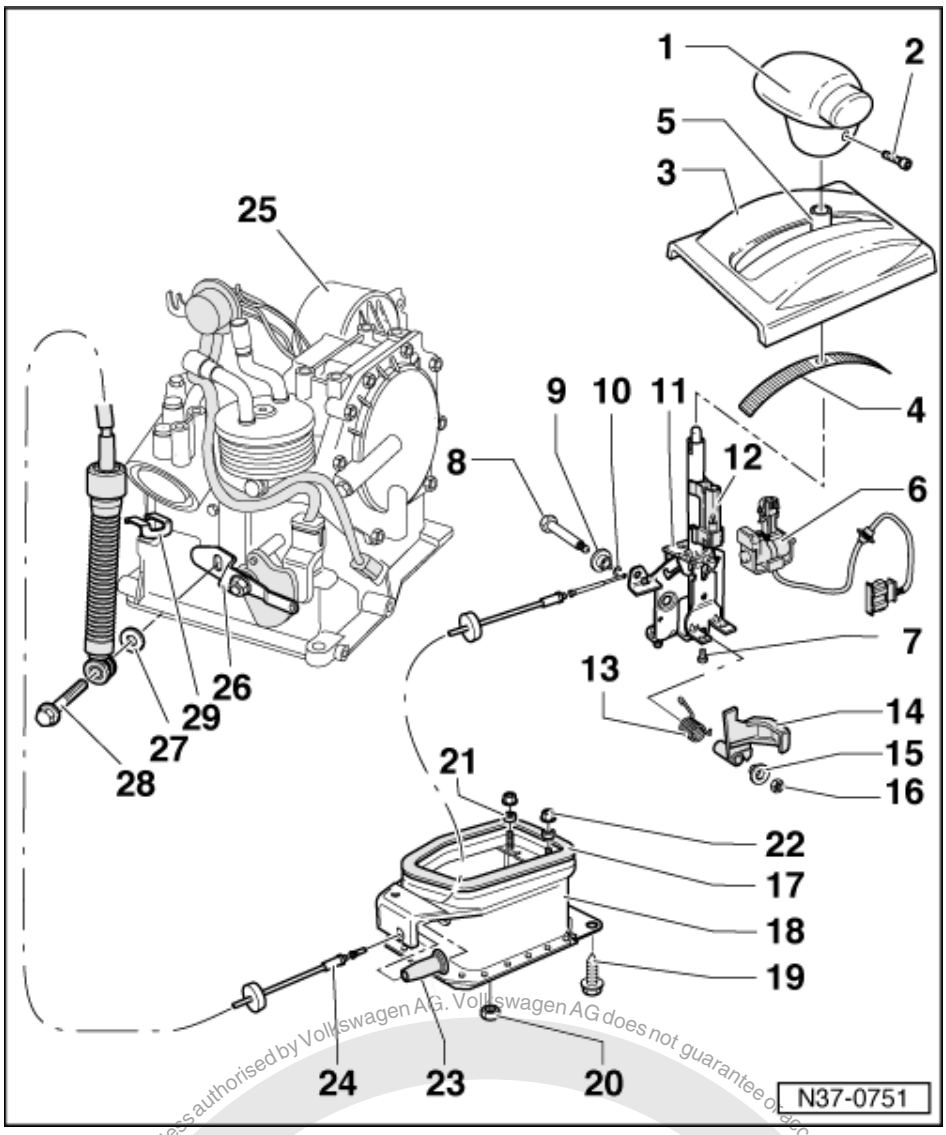

6 Selector lever lock solenoid -N110-
- Adjusting => Fig. 3
- Functional check => Fig. 4
- Securing wiring loom to selector housing => Fig. 6
- Can be checked electrically and by measured value block

=> Self-diagnosis for automatic gearbox 001; Repair group 01; Performing self-diagnosis; Reading measured value block Performing self-diagnosis Reading measured value block

7 Bolt, 3 Nm
- Qty. 2
- Insert with AMV 185 101 A1

8 Combi-bolt
- Grease shank

9 Bush

10 Locking washer
- Installing => Fig. 5

Protected by copyright. Copying for private or commercial purposes, in part or in whole, is not permitted unless authorised by Volkswagen AG. Volkswagen AG does not guarantee or accept any liability with respect to the correctness of information in this document. Copyright by Volkswagen AG.
satelettronica

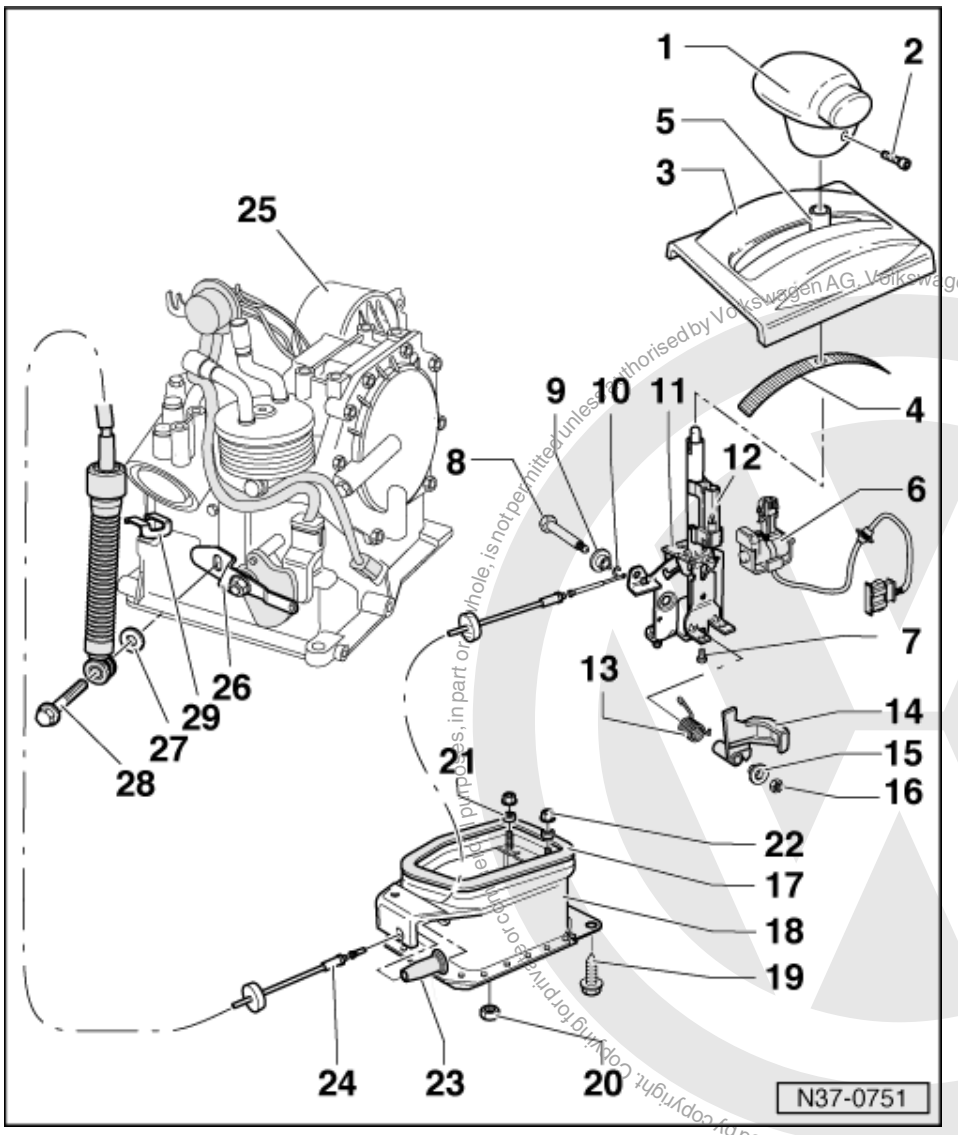

Protected by copyright. Copying for private or commercial purposes, in part or whole, is not permitted unless authorised by Volkswagen AG. Volkswagen AG does not guarantee or accept any liability with respect to the correctness of information in this document. Copyright by Volkswagen AG.
satelettronica

11 Selector lever
- To remove, remove catalyst and forward protective plate.
- Assemble before installing => Fig. 2

12 Indicator lighting
- Securing indicator lighting connector => Fig. 7
- On right-hand drive vehicles there is an additional contact which prevents starting the engine when the "selector lever handle" locking button has been pressed

13 Spring
- Insert together with lever -Fig. 14 - into selector lever

14 Lever
- To lock in selector lever position "P" or "N"

15 Bush

16 Nut, 10 Nm
- Always renew

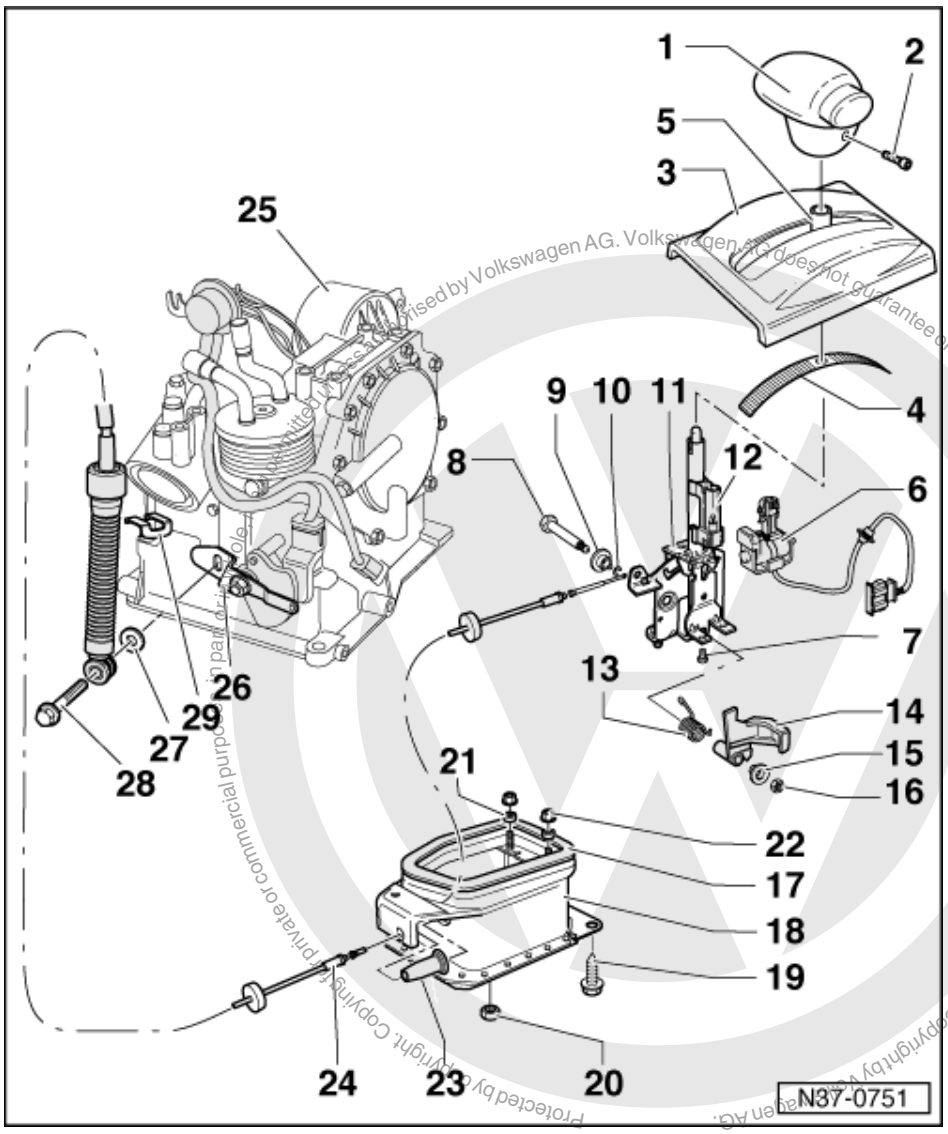

17 Gasket

18 Selector lever housing

- Need not be removed to replace selector lever cable or individual parts of selector mechanism
- Removing => Fig. 1

19 Combi-bolt, 25 Nm

- Qty. 4

20 Nut, 15 Nm

- Qty. 3
- Always renew

21 Distance piece

22 Nuts

- To secure central console

23 Protective sleeve

- Insert into selector lever housing before attaching selector lever cable =>Fig. 8

satelettronica

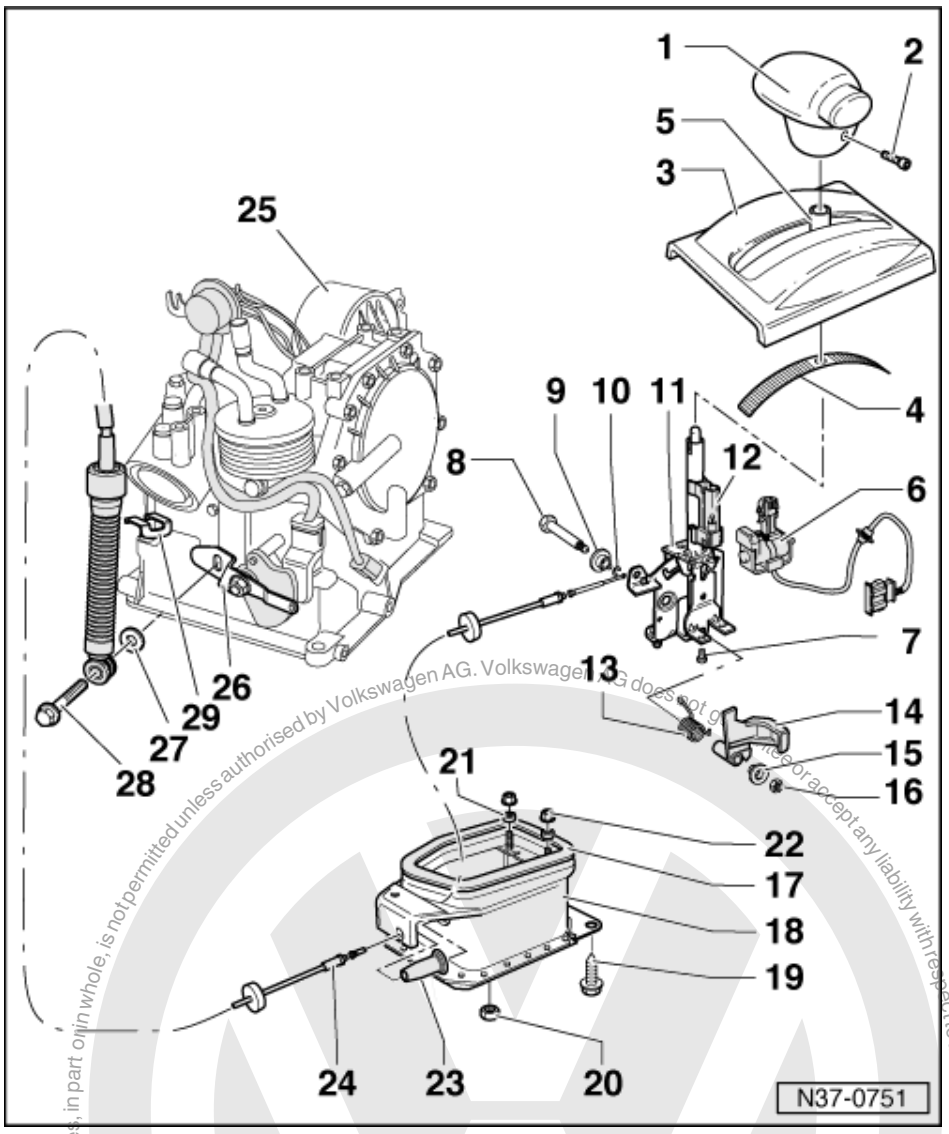

24 Selector lever cable

- To remove, remove catalyst and forward protective plate.
- Do not bend or kink , lightly grease cable eyelet and cable ends before installing
- Check guide tube for tight fit
- Check that protective sleeve between console and lever/selector shaft is correctly located and secure selector lever cable with corrugated locking element
- Securing selector lever cable to selector lever => Fig. 5
- Adjusting => Page 35

Protected by copyright. Copying for private or commercial purposes, in part or in whole, is not permitted unless authorised by Volkswagen AG. Volkswagen AG does not give any representations or accept any liability with respect to the correctness of information in this document. Copyright by Volkswagen AG.

satelettronica

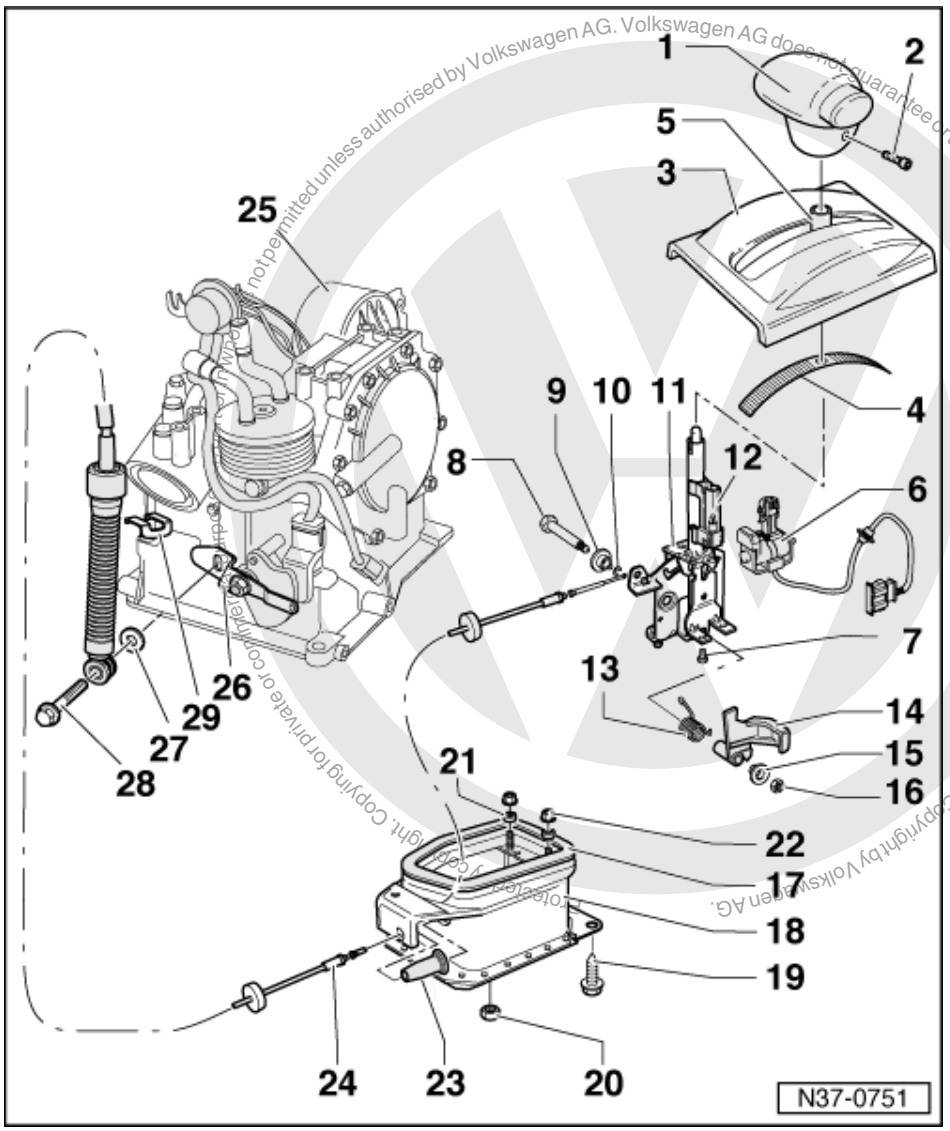

Copyright by Volkswagen AG. Volkswagen AG does not guarantee or accept any liability with respect to the correctness of information in this document. Copyright by Volkswagen AG. Copying for private or commercial purposes, in part or in whole, is not permitted unless authorised by Volkswagen AG.

satelettronica

25 Gearbox

26 Lever

- For selector shaft

27 Washer

28 Combi-bolt, 23 Nm

29 Corrugated locking element

- For selector lever cable
- Always renew

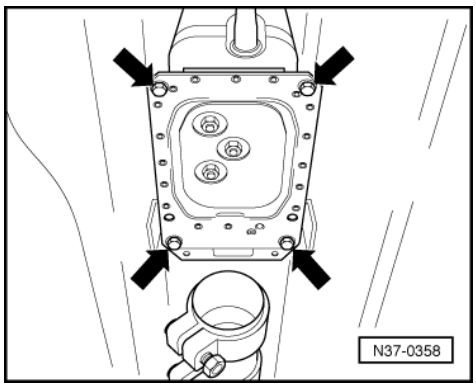

-> Fig.1 Removing selector lever housing

- Remove rear centre console.
- Pull off Lambda probe connector, separate exhaust system at catalyst, remove catalyst.
- Remove front protective plate and bolts (arrows).

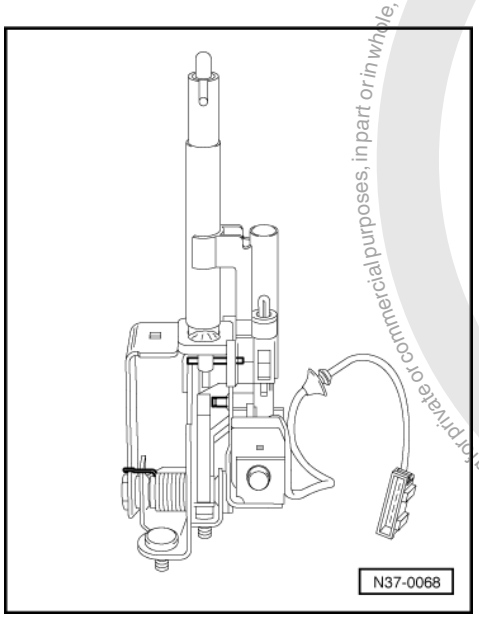

-> Fig.2 Assembling selector lever before installing

Before installing selector lever in selector lever housing adjust selector lever lock solenoid -N110- => Fig. 3 and carry out functional check => Fig. 4 .

- Install set screw and selector lever lock solenoid -N110- screw with locking fluid AMV 185 101 A1.

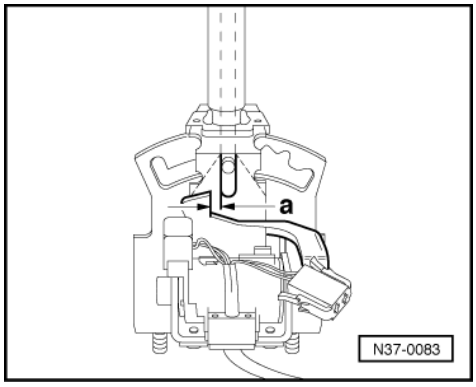

Protected by copyright. Copying for private or commercial purposes, in part or in whole, is not permitted unless authorised by Volkswagen AG. Volkswagen AG does not guarantee or accept any liability with respect to the correctness of information in this document. Copyright by Volkswagen AG.
satelettronica

Protected by copyright. Copying for private or commercial purposes, in part or in whole, is not permitted unless authorised by Volkswagen AG. Volkswagen AG does not guarantee or accept any liability with respect to the correctness of information in this document. Copyright by Volkswagen AG.

-> Fig.3 Adjusting selector lever lock solenoid -N110-

- Adjust solenoid by sliding in elongated holes so that a clearance -a- of 0.3 mm exists between pressure rod and lever => Fig. 4 .

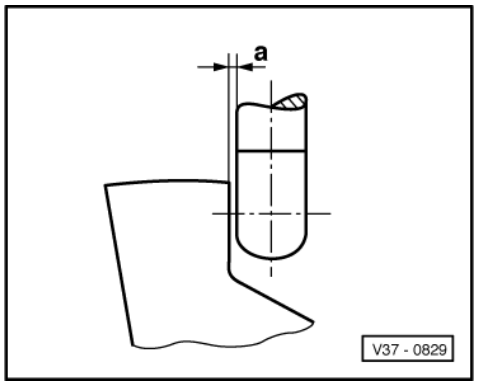

-> Fig.4 Adjusting clearance between pressure rod and lever

Dimension a = 0.3 mm

Functional check

1 - Shift selector lever into "P" and supply solenoid with 12 V. It must not be possible to shift lever into a driving gear.
- Interrupt solenoid operation; it must be possible to shift into all driving gears.
- Pressure rod must not catch on lever.

2 - Shift selector lever into "N" and check as in 1.
- After adjusting clearance, install assembled selector lever.

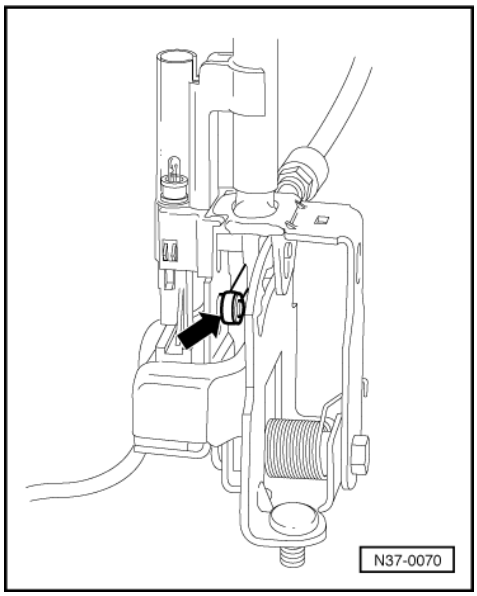

-> Fig.5 Securing selector lever cable to selector lever

- Fit selector lever cable eye (arrow) on selector lever and secure with circlip.

satelettronica

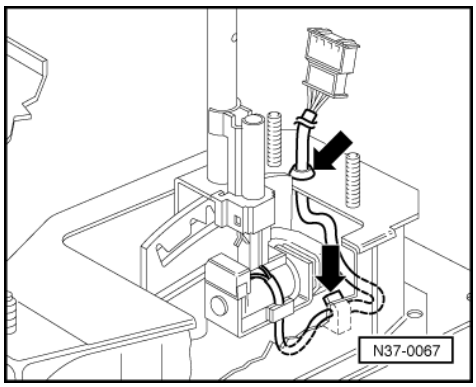

-> Fig.6 Securing wiring loom to selector lever housing

- Press wiring loom into clips and into selector lever housing (arrows).

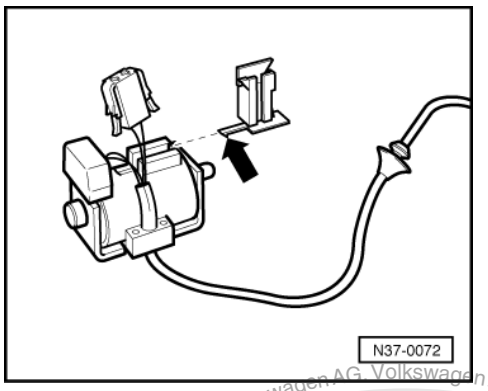

-> Fig.7 Securing indicator lighting connector

- Push bracket with lug (arrow) on until lug engages.
- Seat connector cable into bracket and slide connector onto bracket.

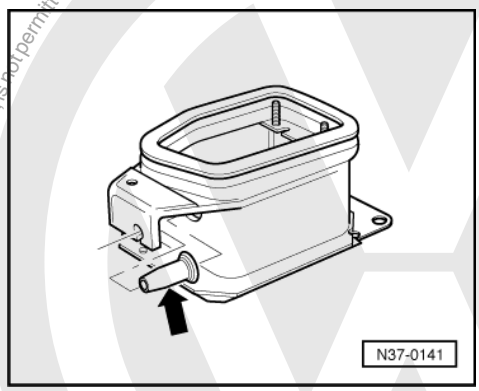

-> Fig.8 Insert boot in selector lever housing

- Before installing the selector lever cable insert boot (arrow).

Protected by copyright. Copying for private or commercial purposes, in part or in whole, is not permitted unless authorised by Volkswagen AG. Volkswagen AG does not guarantee or accept any liability with respect to the correctness of information in this document. Copyright by Volkswagen AG.
satelettronica

2.8 - Dismantling and assembling selector mechanism on vehicles with ignition key removal lock from 06.99

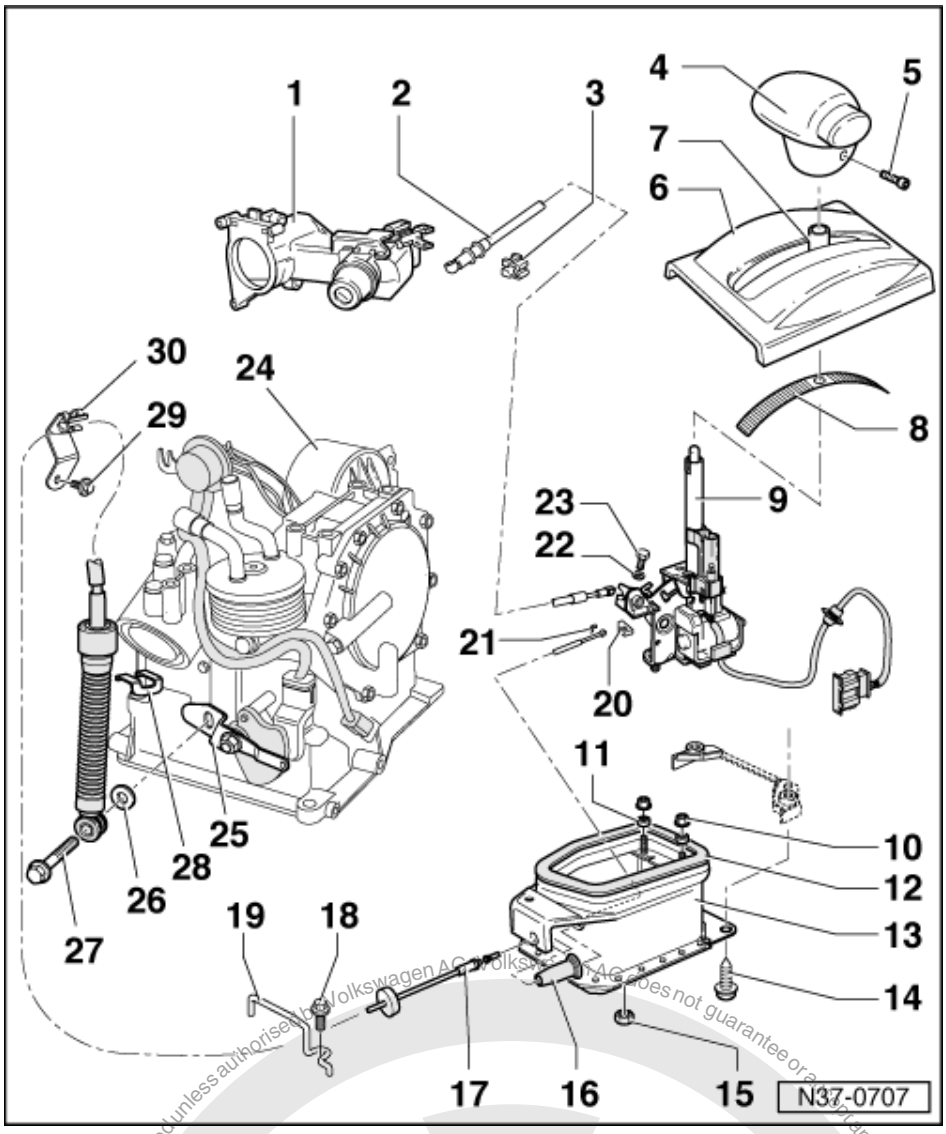

1 Ignition/starter switch
2 Locking cable
- Must not be kinked
- Adjusting => Page 33
- Removing and installing => Page 30

3 Clip
- For securing locking cable
- Always renew

4 Selector lever handle
5 Set screw, 1.5 Nm
6 Cover
- With selector indicator

7 Protective sleeve for selector lever

satelettronica

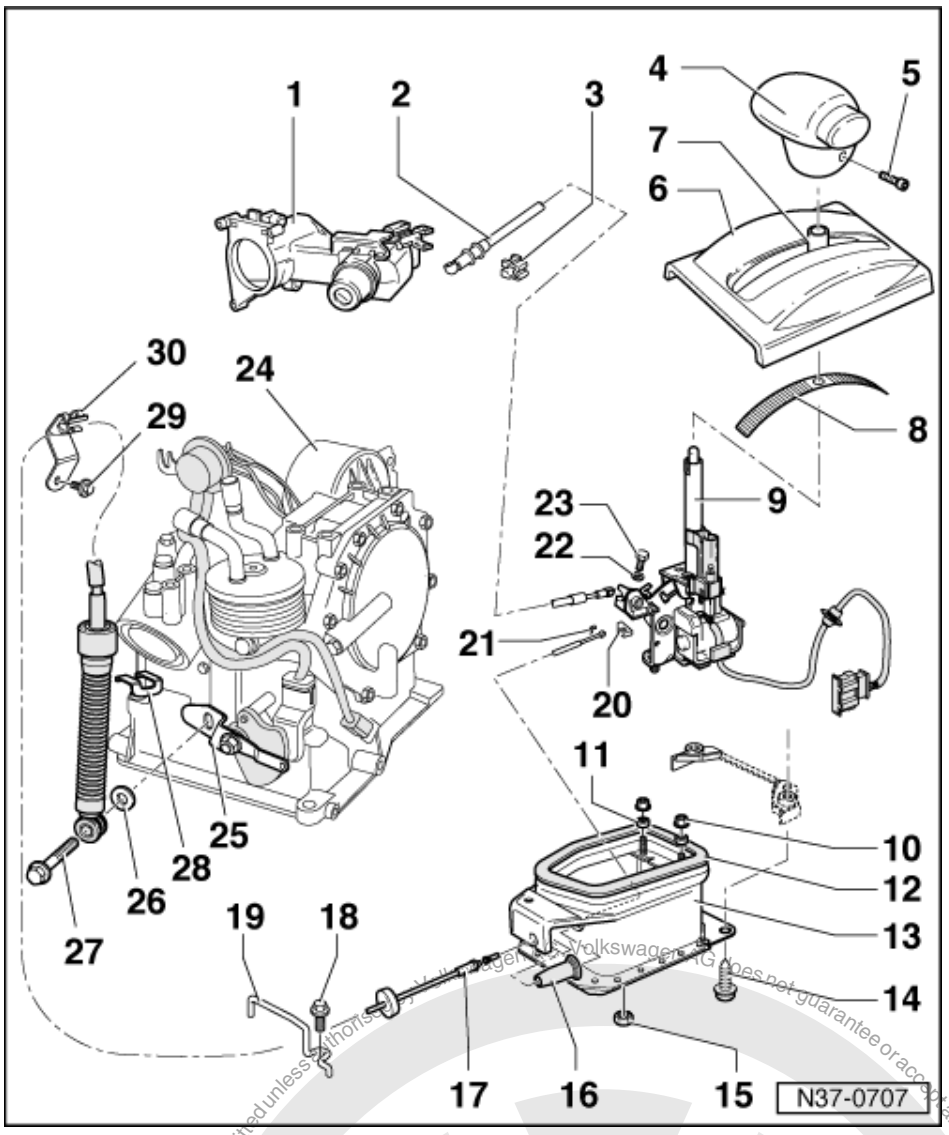

8 Cover strip
- Insert in cover -Fig. 6 -

9 Selector lever
- Dismantling and assembling => Page 53
- To remove, remove catalyst and forward protective plate.
- When installing selector lever, insert locking cable anchorage in notch of selector lever housing.
- Securing wiring loom to selector lever housing => Fig. 2

10 Nuts
- To secure central console

11 Distance piece

12 Gasket

satelettronica
Protected by copyright. Copying for private or commercial purposes, in part or in whole, is not permitted unless authorised by Volkswagen AG. Volkswagen AG does not guarantee or accept any liability with respect to the correctness of information in this document. Copyright by Volkswagen AG.

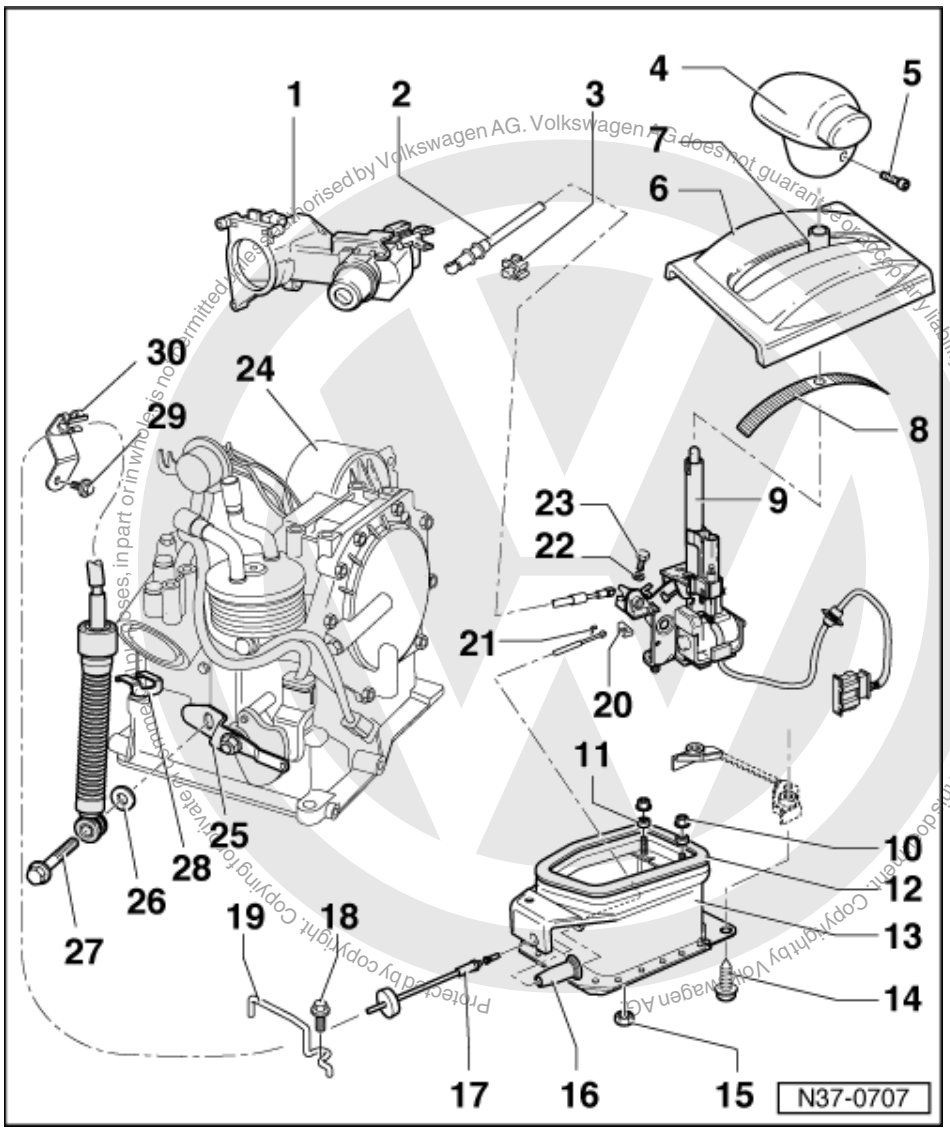

13 Selector lever housing

- Need not be removed to renew selector lever cable or individual parts of shift mechanism
- Removing and installing => Fig. 1

14 Screw, 25 Nm

- Qty. 4

15 Nut, 15 Nm

- Always renew
- Qty. 3

16 Protective sleeve

- Insert into selector lever housing before attaching selector lever cable =>Fig. 4

satelettronica

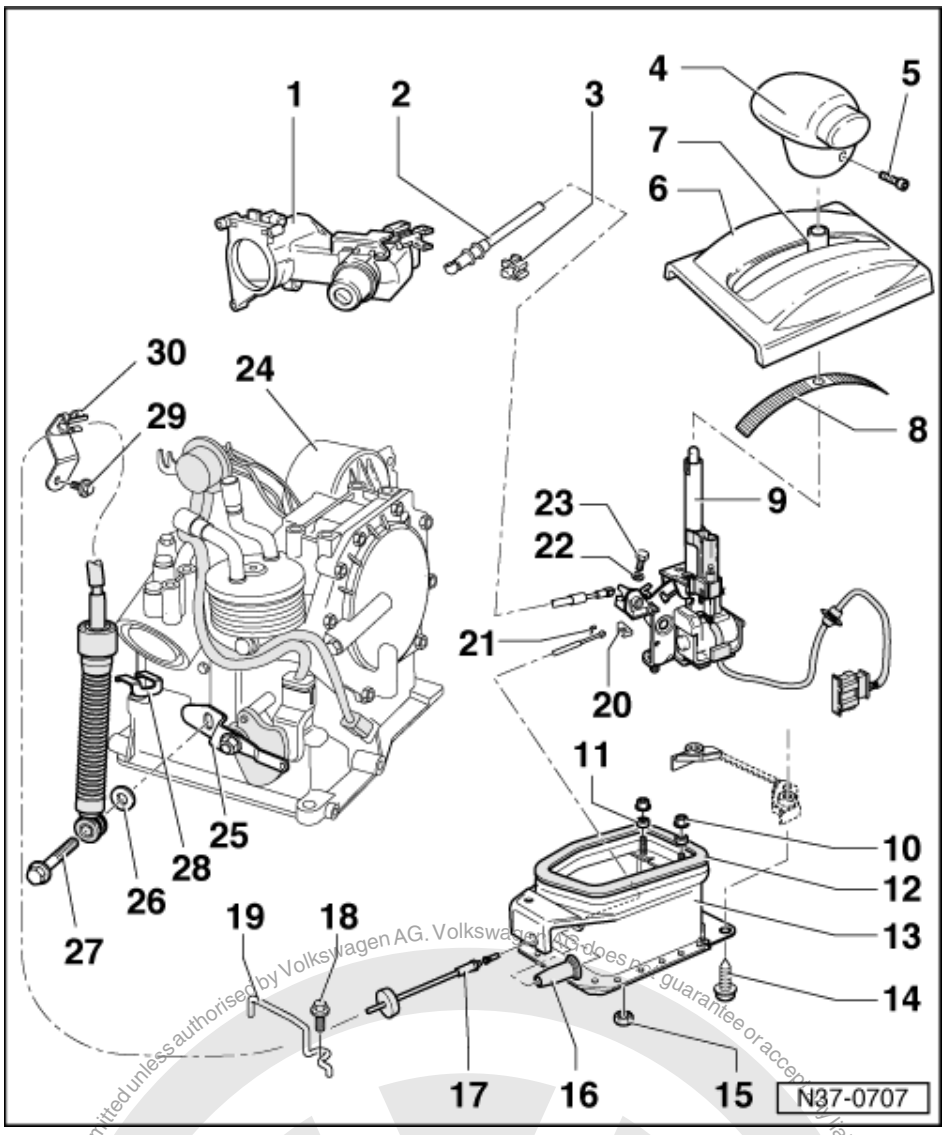

17 Selector lever cable

- To remove, remove catalyst and forward protective plate.
- Do not bend or kink, lightly grease cable eye and cable ends before installing.
- Check guide tube for tight fit
- Check protective sleeve between console and lever/gearshift shaft for proper seating and secure selector lever cable with corrugated locking element
- Attach selector lever cable to selector lever => Fig. 5
- Adjusting => Page 35

18 Hexagon bolt, 6 Nm

19 Bracket

- Secures selector lever cable to sub-frame

20 Seal

- Bonded to cable anchorage
- Renew if damaged

Protected by copyright. Copying for private or commercial purposes, in part or in whole, is not permitted unless authorised by Volkswagen AG. Volkswagen AG does not guarantee or accept any liability with respect to the correctness of information in this document. Copyright by Volkswagen AG.
satelettronica

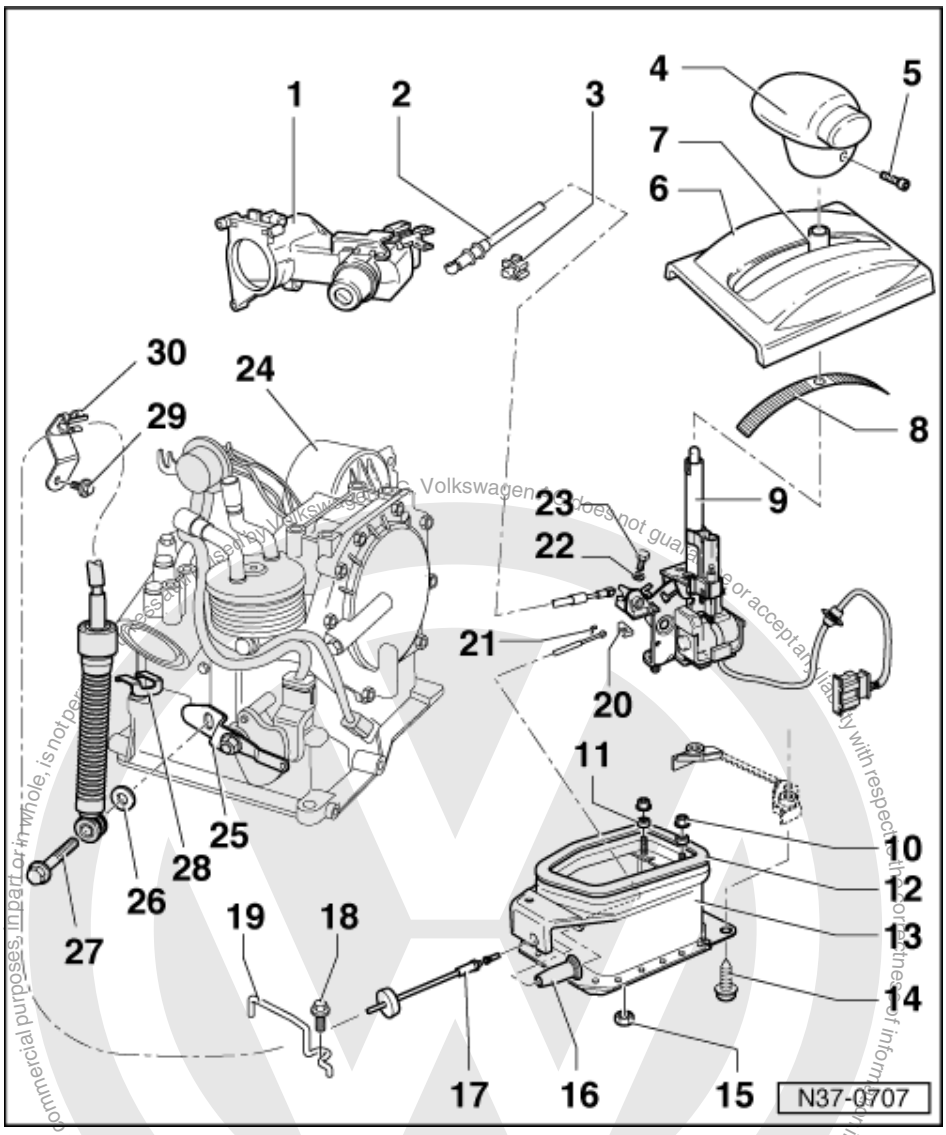

21 Circlip
- Install after fitting selector lever cable => Fig. 5

22 Washer

23 Bolt, 6 Nm

24 Gearbox

25 Lever
- For selector shaft

26 Washer

27 Combi-bolt, 23 Nm

28 Corrugated locking element
- For selector lever cable
- Always renew

29 Bracket
- To secure selector lever cable in engine compartment

30 Hexagon bolt, 6 Nm

Volkswagen does not guarantee or accept any liability with respect to the correctness of information in this document. Copyright by Volkswagen AG.
Protected by copyright. Copying for private or commercial purposes, in part or in whole, is not permitted unless authorised by Volkswagen AG.
satelettronica

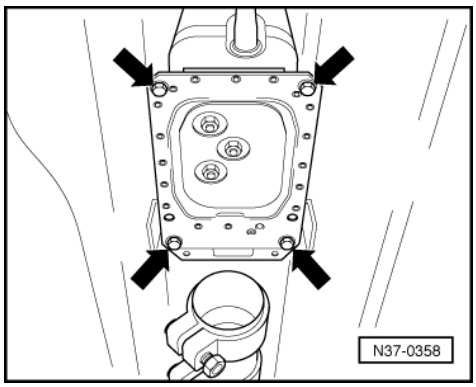

-> Fig.1 Removing and installing selector lever housing

- Remove rear centre console.
- Pull off Lambda probe connector, separate exhaust system at catalyst, remove catalyst.
- Remove front protective plate and bolts (arrows).

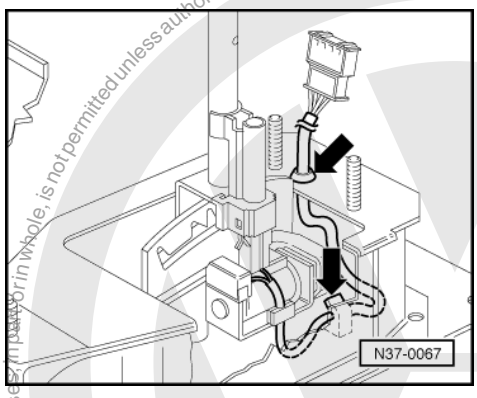

-> Fig.2 Securing wiring loom to selector lever housing

- Press wiring loom into clips and into selector lever housing (arrows).

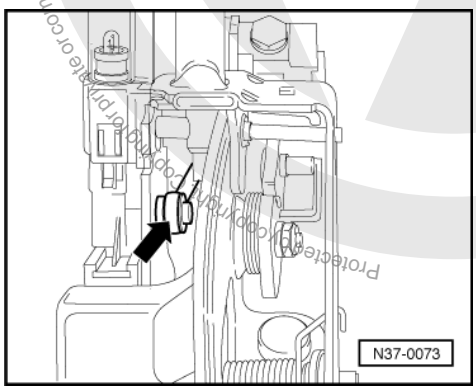

-> Fig.3 Attaching selector lever cable to selector lever

- Fit selector lever cable eye (arrow) on selector lever and secure with circlip.

Protected by copyright. Copying for private or commercial purposes, in part or in whole, is not permitted unless authorised by Volkswagen AG. Volkswagen AG cannot guarantee or accept any liability with respect to the correctness of information in this document. Copyright by Volkswagen AG.
satelettronica

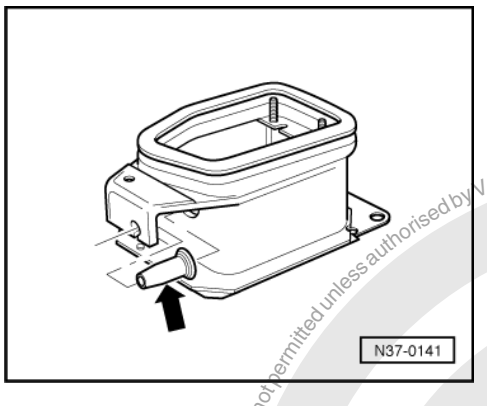

-> Fig.4 Insert boot in selector lever housing

- Before installing the selector lever cable insert boot (arrow).

2.9 - Dismantling and assembling selector lever on vehicles with ignition key removal lock up to 06.99

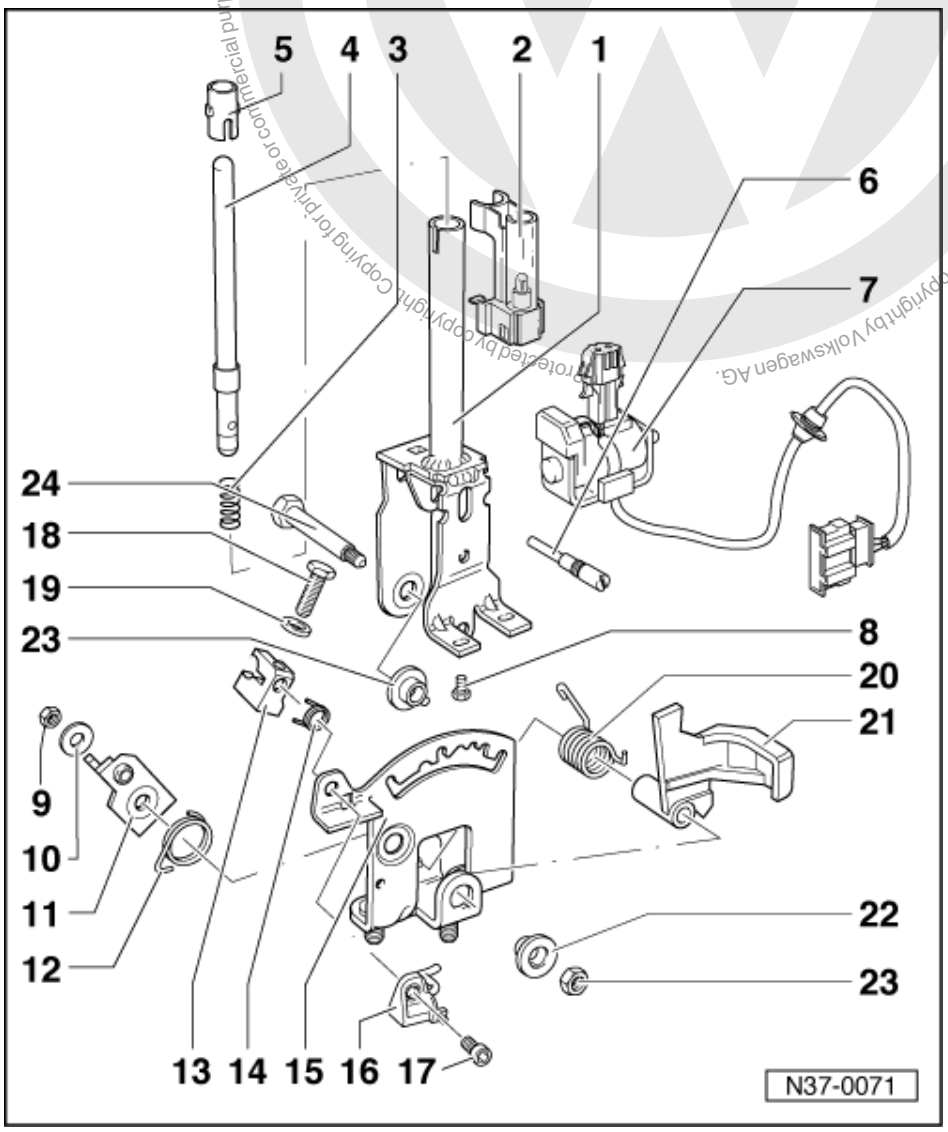

Copyright by Volkswagen AG. Volkswagen AG does not guarantee or accept any liability with respect to the correctness of information in this document. Copyright by Volkswagen AG. Protected by copyright. Copying for private or commercial purposes, in part or in whole, is not permitted unless authorised by Volkswagen AG.

satelettronica

Selector lever must be removed to renew individual parts

=>Page 47 .

Lubricate all mountings and sliding surfaces with Polyurea grease Part No. G 052 142 A2.

1 Selector lever
- Assembling => Fig. 1

2 Indicator lighting
- Securing indicator lighting connector => Fig. 4
- On right-hand drive vehicles there is an additional contact which prevents starting the engine when the "selector lever handle" locking button has been pressed

3 Spring

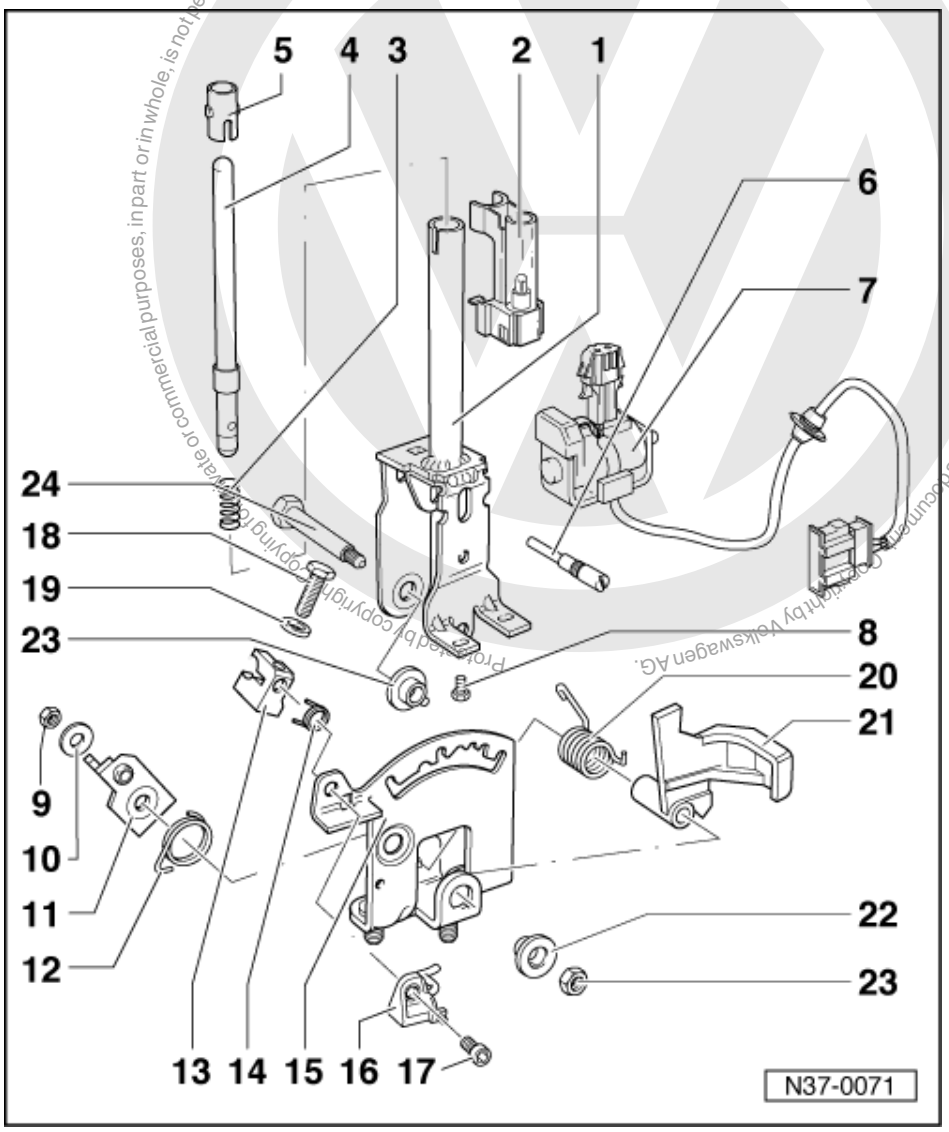

4 Push rod
- Grease in area of sliding surfaces

5 Guide sleeve
- Fit after installing pressure rod

6 Set screw
- Screwed into the push rod
- Locates in the detent plate -item 15 -
- Always renew

Protected by copyright. Copying for private or commercial purposes, in part or in whole, is not permitted unless authorised by Volkswagen AG. Volkswagen AG does not guarantee or accept any liability with respect to the correctness of information in this document. Copyright by Volkswagen AG.

satelettronica

- To remove set screw, remove solenoid for selector lever lock and scale lighting. Clamp set screw in vice and loosen by turning selector lever.
- Install with locking fluid AMV 185 101 A1

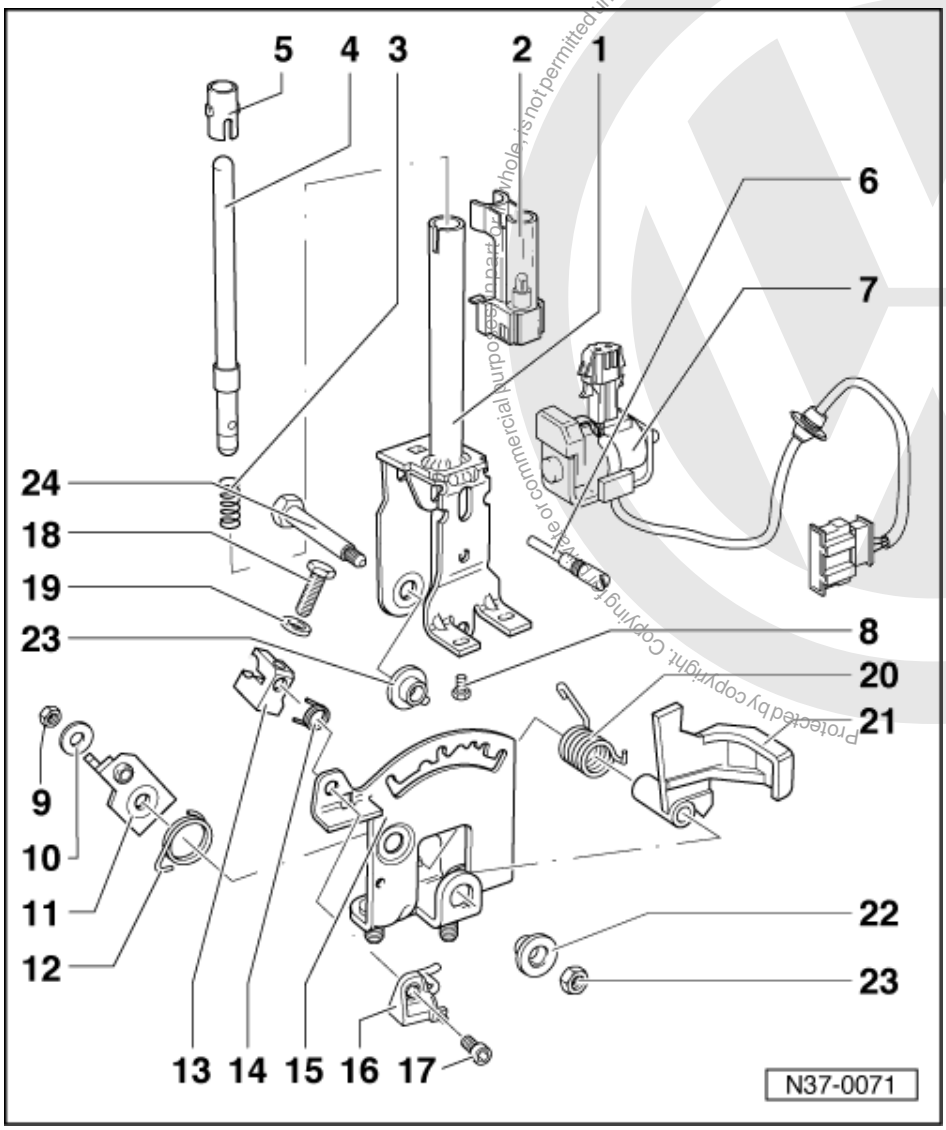

7 Selector lever lock solenoid -N110-
- Adjusting =>Fig. 2
- Functional check => Fig. 3
- Can be checked electrically and by measured value block

=> Self-diagnosis for automatic gearbox 001; Repair group 01; Performing self-diagnosis; Reading measured value block Performing self-diagnosis Reading measured value block

8 Screw, 3 Nm
- Qty. 2
- Install with locking fluid AMV 185 101 A1

9 Nut, 5 Nm
- Always renew

10 Washer

11 Locking lever
- For ignition key removal lock
- Adjust together with locking cable =>Page 33

Protected by copyright. Copying for commercial purposes, part of this publication is not permitted unless authorised by Volkswagen AG. Volkswagen AG does not guarantee or accept any liability with respect to the correctness of information in this document. Copyright by Volkswagen AG.
satelettronica

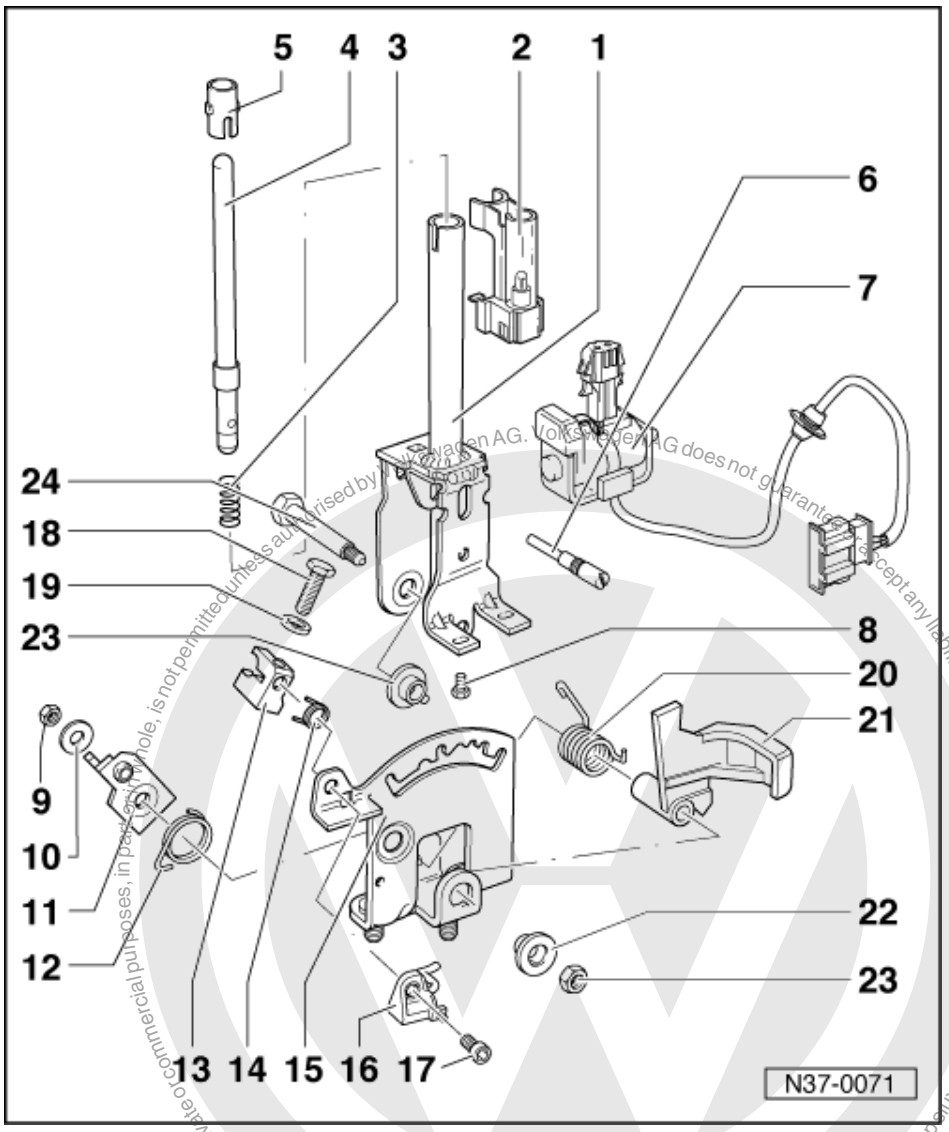

12 Spring
- Hook into hole of detent plate

13 Retainer
- For locking cable
- Removing and installing locking cable => Page 30
- Adjusting locking cable => Page 33

14 Spring
- For locking pin

15 Detent plate
- Assemble selector lever before fitting in selector lever housing => Fig. 1

16 Locking pin
- With bracket

17 Hexagon socket headed screw,
6 Nm

satelettronica

Volkswagen AG. Volkswagen AG does not guarantee or accept any liability with respect to the correctness of information in this document. Copyright by Volkswagen AG. Copying for private or commercial purposes, in part or in whole, is not permitted unless authorised by Volkswagen AG.

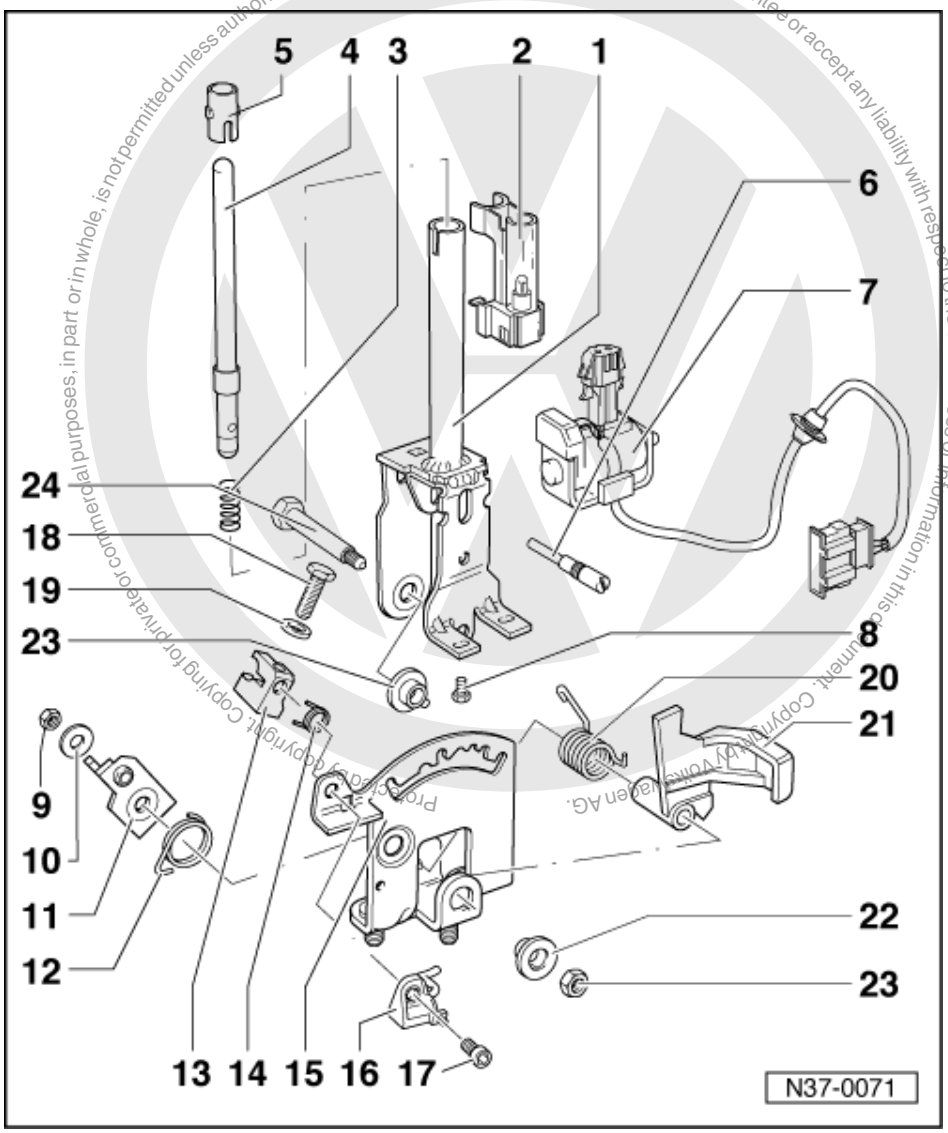

18 Screw, 6 Nm
19 Washer
20 Spring
- Insert in selector lever together with lever -Item 21 -

21 Lever
- For locking in selector lever position "N" or "P"
- Adjusting =>Fig. 2

22 Bush
23 Nut, 10 Nm
- Always renew

24 Combi-bolt
- Grease shank

satelettronica

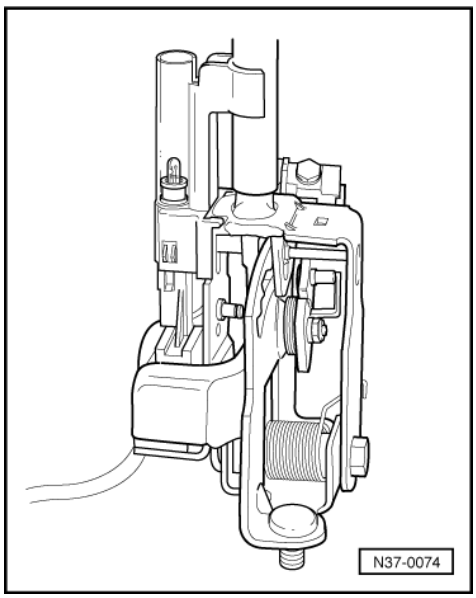

-> Fig.1 Assembling selector lever before installing

Adjust solenoid for selector lever lock -N110- and carry out functional check => Fig. 3 before installing selector lever in selector lever housing.

- Install set screw and selector lever lock solenoid -N110- screws with locking fluid AMV 185 101 A1.

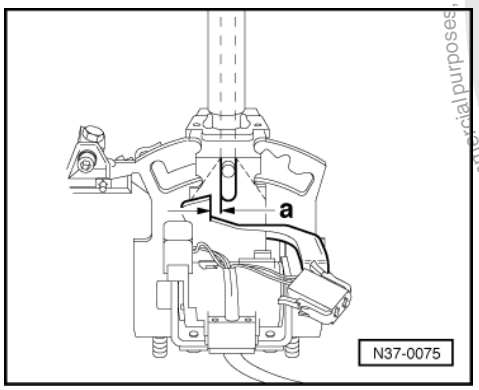

-> Fig.2 Adjusting selector lever lock solenoid -N110-

- Adjust solenoid by sliding in elongated holes so that a clearance -a- of 0,3 mm exists between pressure rod and lever => Fig. 3 .

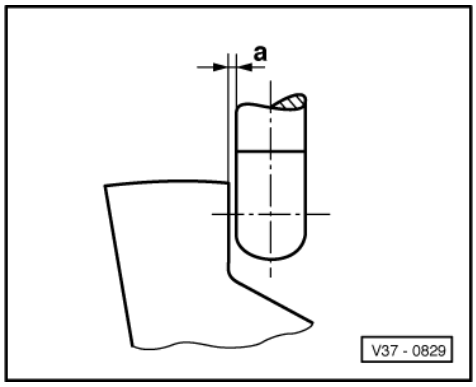

Protected by copyright. Copying for private or commercial purposes, in part or in whole, is not permitted unless authorised by Volkswagen AG. Volkswagen AG does not guarantee or accept any liability with respect to the correctness of information in this document. Copyright by Volkswagen AG.
satelettronica

-> Fig.3 Adjusting clearance between pressure rod and lever

Dimension a = 0.3 mm

Functional check

- Shift selector lever into "P" and supply solenoid with 12 V. It must not be possible to shift selector lever into a driving gear
  - Interrupt solenoid operation; it must be possible to shift into driving gears.

  Pressure rod must not catch on lever.

- Shift selector lever into "N" and check as in "P".
- After adjusting clearance, install assembled selector lever.

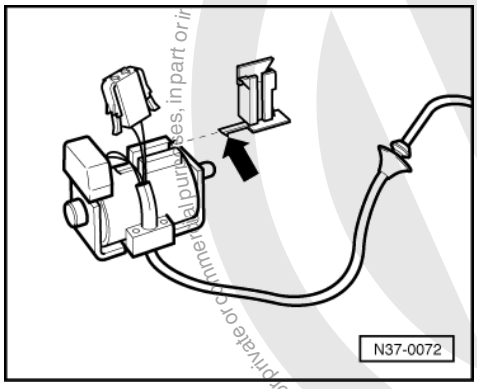

-> Fig.4 Securing indicator lighting connector

- Push bracket with lug (arrow) on until lug engages.
- Seat connector cable into bracket and slide connector onto bracket.

Protected by Copyright. Copying for private or commercial purposes, in part or in whole, is not permitted unless authorised by Volkswagen AG. Volkswagen AG does not guarantee or accept any liability with respect to the correctness of information in this document. Copyright by Volkswagen AG.

satelettronica

2.10 - Dismantling and assembling selector mechanism on vehicles from 07.99

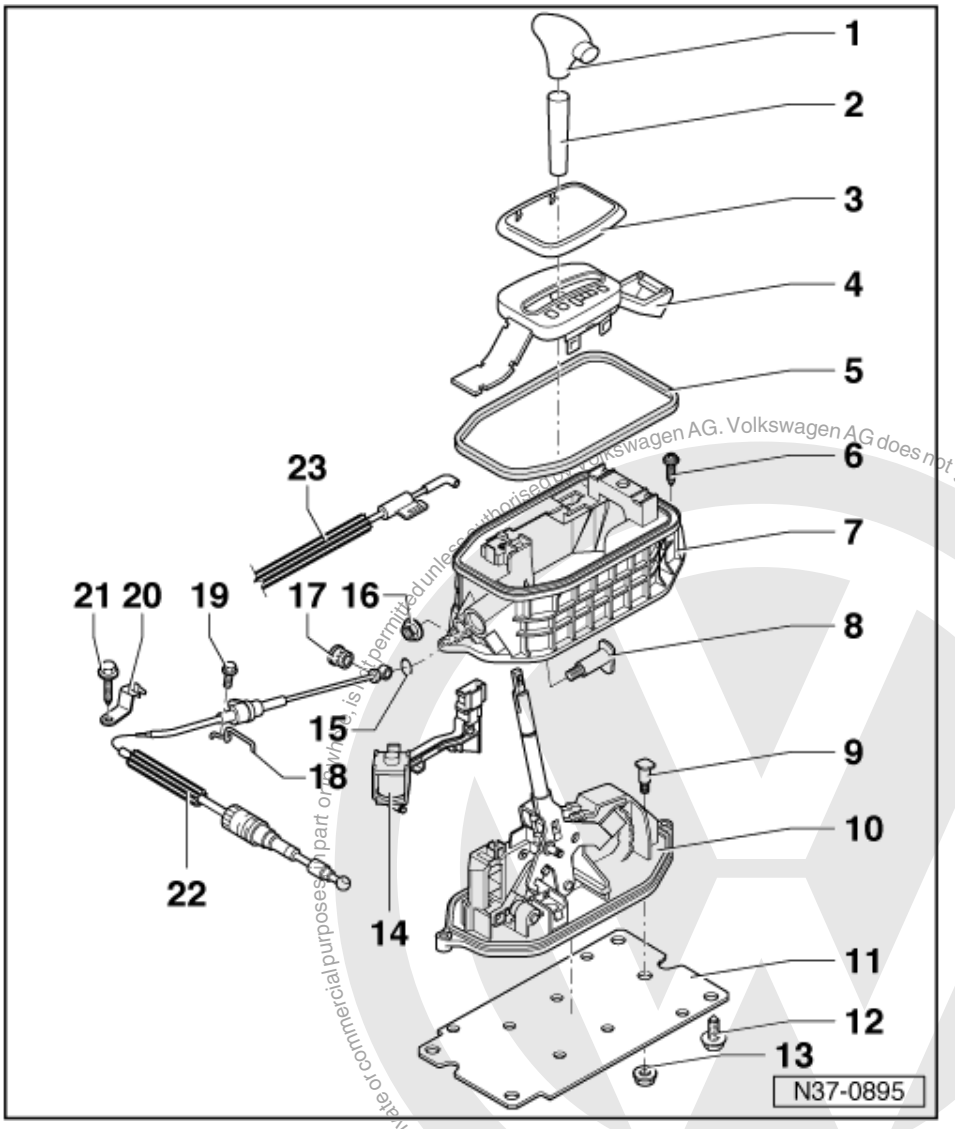

1 Selector lever handle
- Removing and installing =>from page 62

2 Sleeve
3 Frame
4 Cover
5 Gasket
6 Bolt
7 Selector lever housing
- Separating selector lever from selector lever housing=> Fig. 2

8 Pin
9 Pin
10 Selector lever
11 Cover plate

Protected by copyright. Copying for private or commercial purposes, in part or in whole, is not permitted unless authorised by Volkswagen AG. Volkswagen AG does not guarantee or accept any liability with respect to the correctness of information in this document. Copyright by Volkswagen AG.
satelettronica

Protected by copyright. Copying for private or commercial purposes, in part or in whole, is not permitted unless authorised by Volkswagen AG. Volkswagen AG does not guarantee or accept any liability with respect to the correctness of information in this document. Copyright by Volkswagen AG.

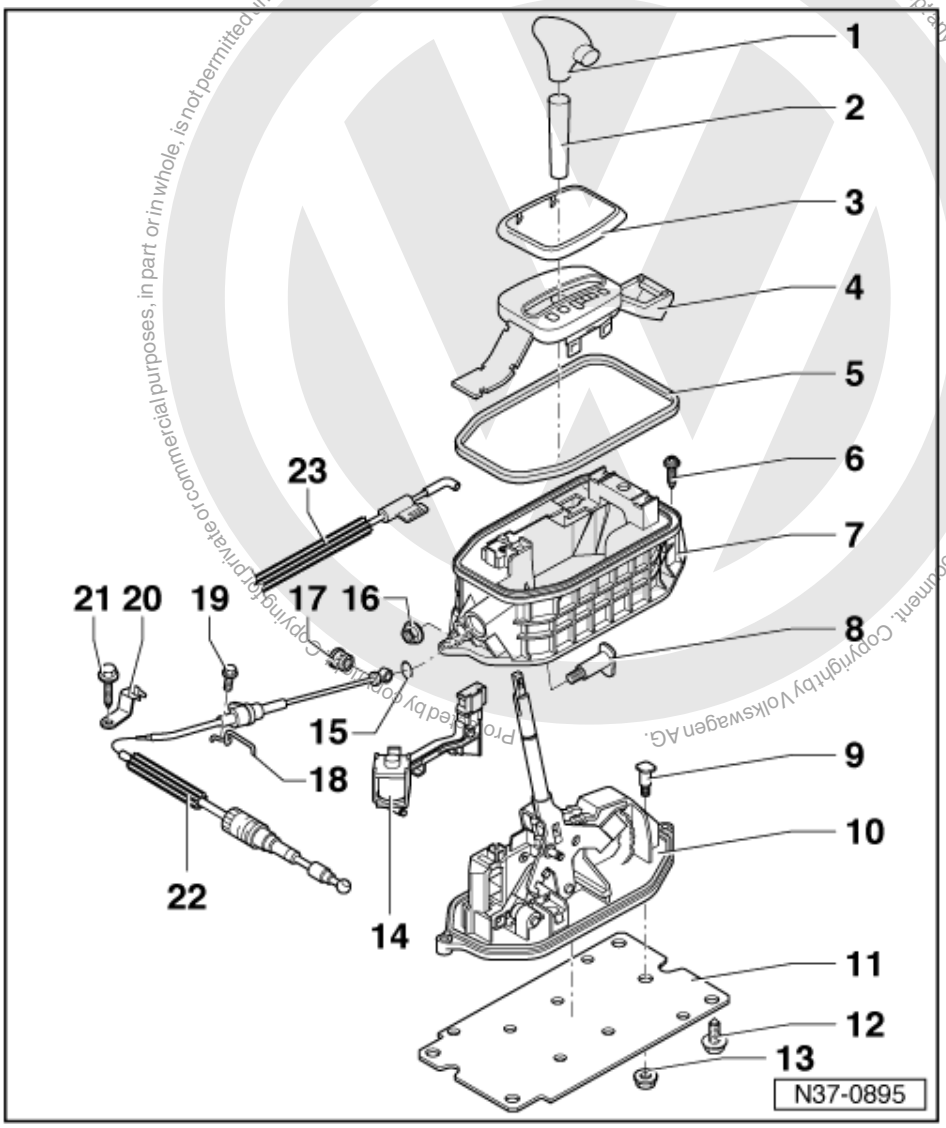

12 Screw, 25 Nm
- Qty. 4

13 Nut, 15 Nm
- Qty. 3
- Always renew

14 Selector lever lock solenoid -N110-
- Tested in the vehicle by self-diagnosis

=> Self-diagnosis for automatic gearbox 001; Repair group 01; Performing self-diagnosis; Reading measured value block Performing self-diagnosis Reading measured value block

- Installing => Fig. 1

15 Circlip
- Always renew

16 Nut, 15 Nm
- Always renew

17 Bush

18 Bracket
- Secures selector lever cable to sub-frame

satelettronica

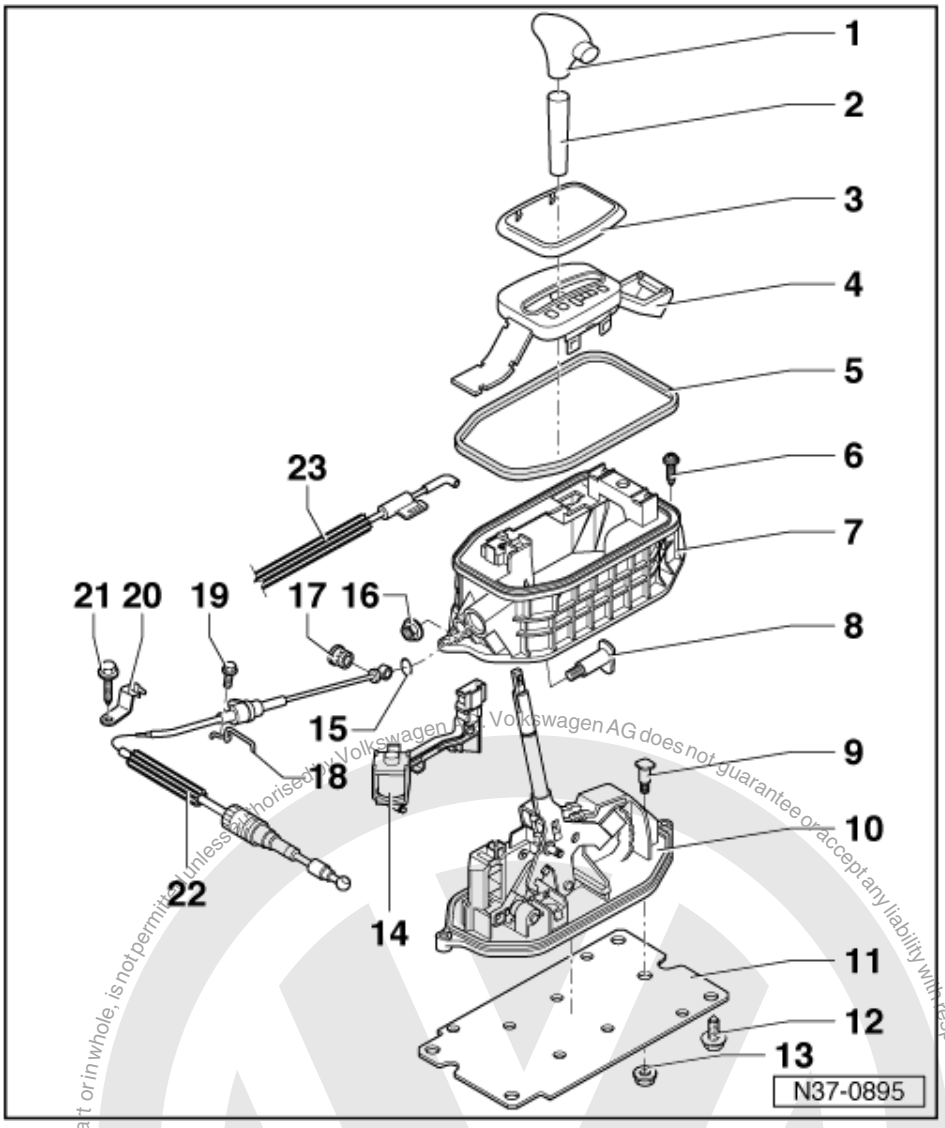

19 Hexagon bolt, 6 Nm

20 Bracket

- To secure selector lever cable in engine compartment

21 Hexagon bolt, 6 Nm

22 Selector lever cable

- To remove, remove catalyst and forward protective plate.
- Do not bend or kink, lightly grease cable eye and cable ends before installing.
- Checking and adjusting on vehicles from 07.99 =>page 35

23 Locking cable

- Must not be kinked
- Adjusting on vehicles from 07.99 => page 35
- Removing and installing => Page 30

Protected by copyright. Copyright by Volkswagen AG.
Volkswagen AG does not guarantee or accept any liability with respect to the correctness of information in this document. Copyright by Volkswagen AG.
Volkswagen AG, authorised by Volkswagen AG, is not permitted unless authorised by Volkswagen AG.
satelettronica

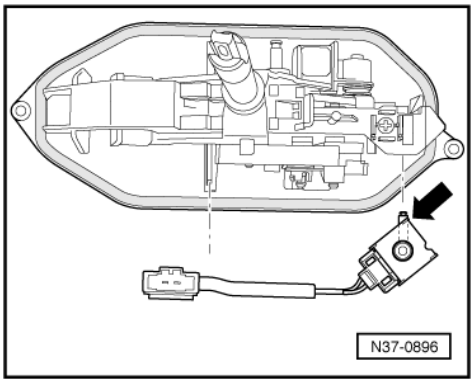

-> Fig.1 Removing and installing solenoid -N110-

- Insert solenoid pull rod -arrow- in rectangular aperture of locking lever.

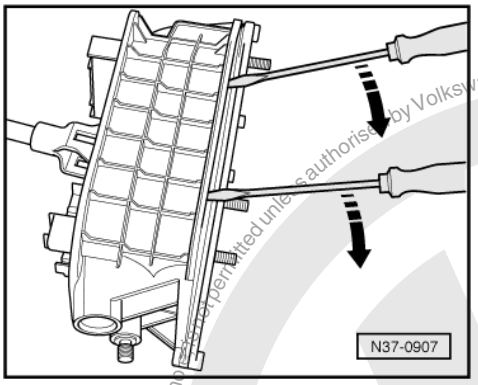

-> Fig.2 Separating selector lever from selector lever housing

The selector lever is engaged in the selector lever housing twice on each side.

- Carefully release the locking tabs on both sides.

2.11 - Removing and installing selector lever handle on vehicles from 07.99

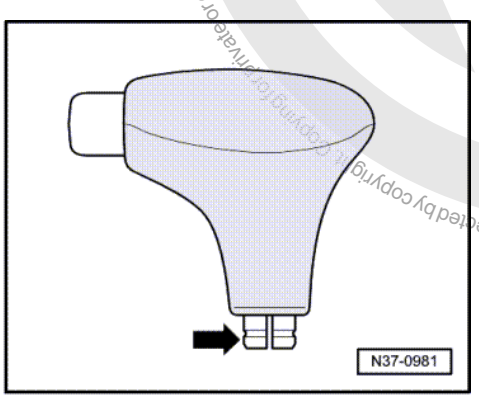

There are various handles which are removed and installed in different ways.

- Slide the sleeve on the selector lever downwards slightly always before starting assembly work.
- -> Check the colour of the plastic part in the handle.

Protected by copyright. Copying for private or commercial purposes, in part or in whole, is not permitted unless authorised by Volkswagen AG. Volkswagen AG does not guarantee or accept any liability with respect to the correctness of information in this document. Copyright by Volkswagen AG.
satelettronica

Colour is black: Removing and installing => page 63 .

Colour is red-brown: this handle can replace the handle with the black plastic part.

Removing

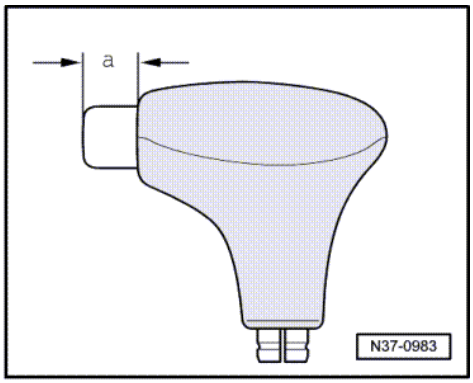

- Pull upwards on handle, do not press button when doing this.

If the button is inadvertently pressed, then blow outwards again carefully with compressed air.

- -> Ensure always that the button is projecting at least 10 mm -a- when installing.

Pull the button outwards past the detectable pressure point by hand, this will stop it falling back.

- Position lever to "D" and push the handle onto selector lever to install.

Removing handle with black plastic part

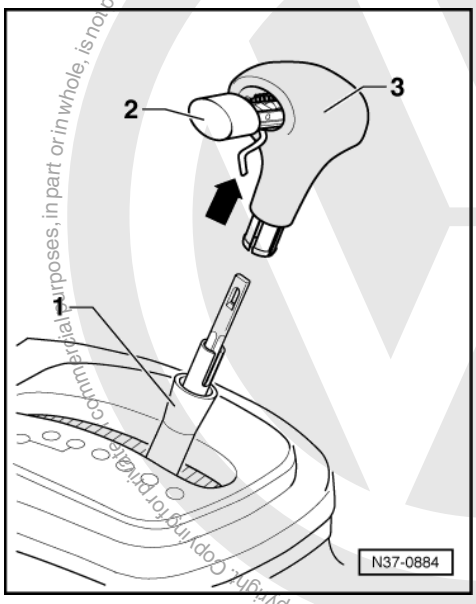

- Set selector lever in position "R".
- -> Slide sleeve -1- downwards.
- Pull the button -2- out of handle -3- just enough that the pull lever -arrow- hangs downwards.
- Now pull the handle off the selector lever.

Installing

- Set selector lever in position "R".

satelettronica

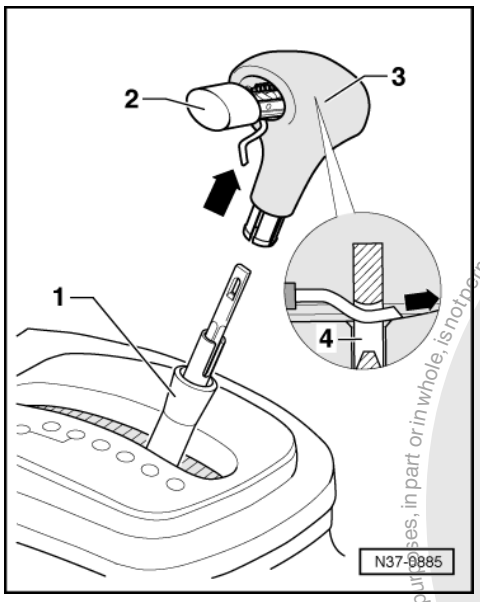

- -> Pull the button -2- out of handle -3- just enough that the pull lever -arrow- hangs downwards.
- Now press the handle on selector lever onto stop.

  Installation position: Button points to driver.

- Pull button out slightly and guide the pull lever -arrow- into the handle.
- Press the button so that the pull lever engages in the pull rod -4-.

  The button must now spring back onto stop.

- Slide the sleeve -1- upwards.
- Set selector lever in position "P".

Protected by copyright. Copying for private or commercial purposes, in part or in whole, is not permitted unless authorised by Volkswagen AG. Volkswagen AG does not guarantee or accept any liability with respect to the correctness of information in this document. Copyright by Volkswagen AG.
satelettronica

3 - Removing and installing gearbox

3.1 - Removing and installing gearbox

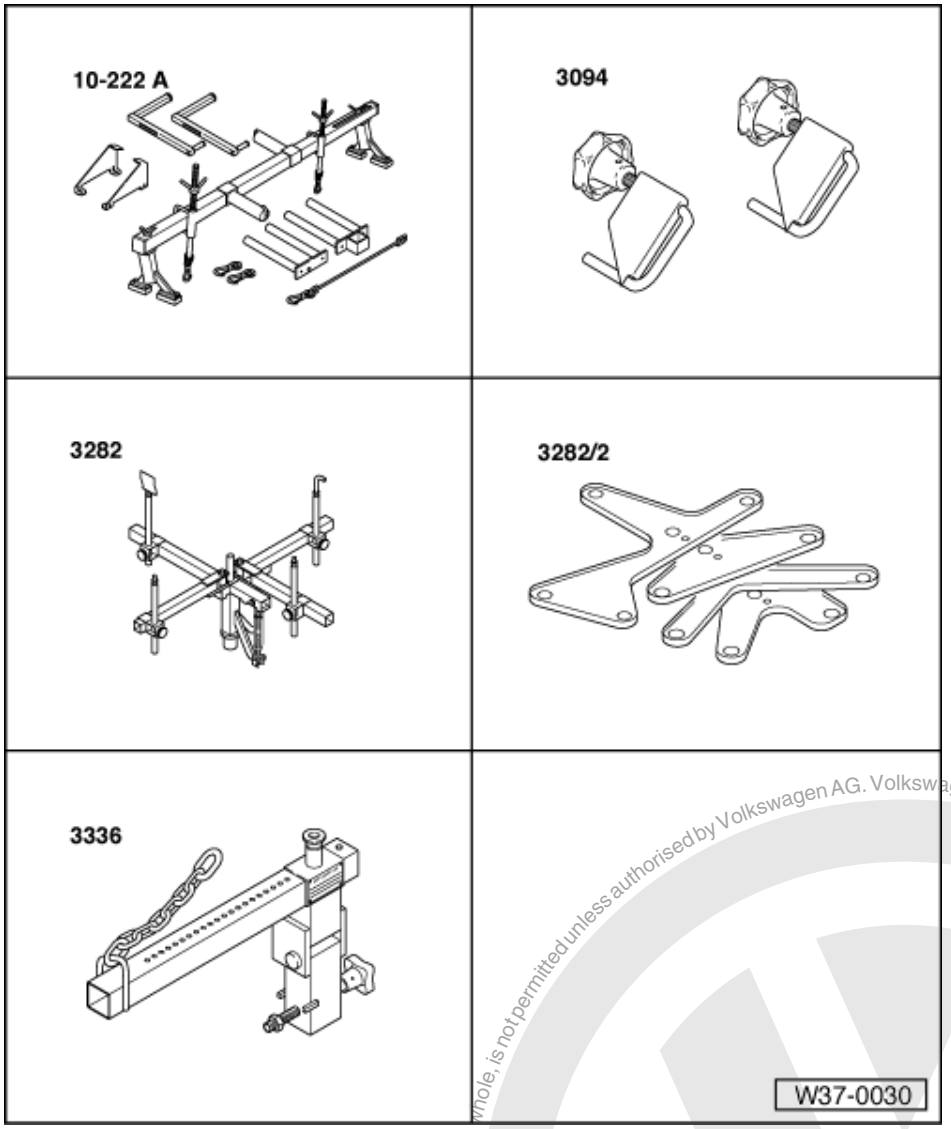

Special tools and workshop equipment required

- 10-222 A Support
- 3094 Hose clamps
- 3282 Gearbox support
- 3282/24 Adjustment plate
- 3336 Gearbox lifting beam

Protected by copyright. Copying for private or commercial purposes, in part or in whole, is not permitted unless authorised by Volkswagen AG. Volkswagen AG does not guarantee or accept any liability with respect to the correctness of information in this document. Copyright by Volkswagen AG.
satelettronica

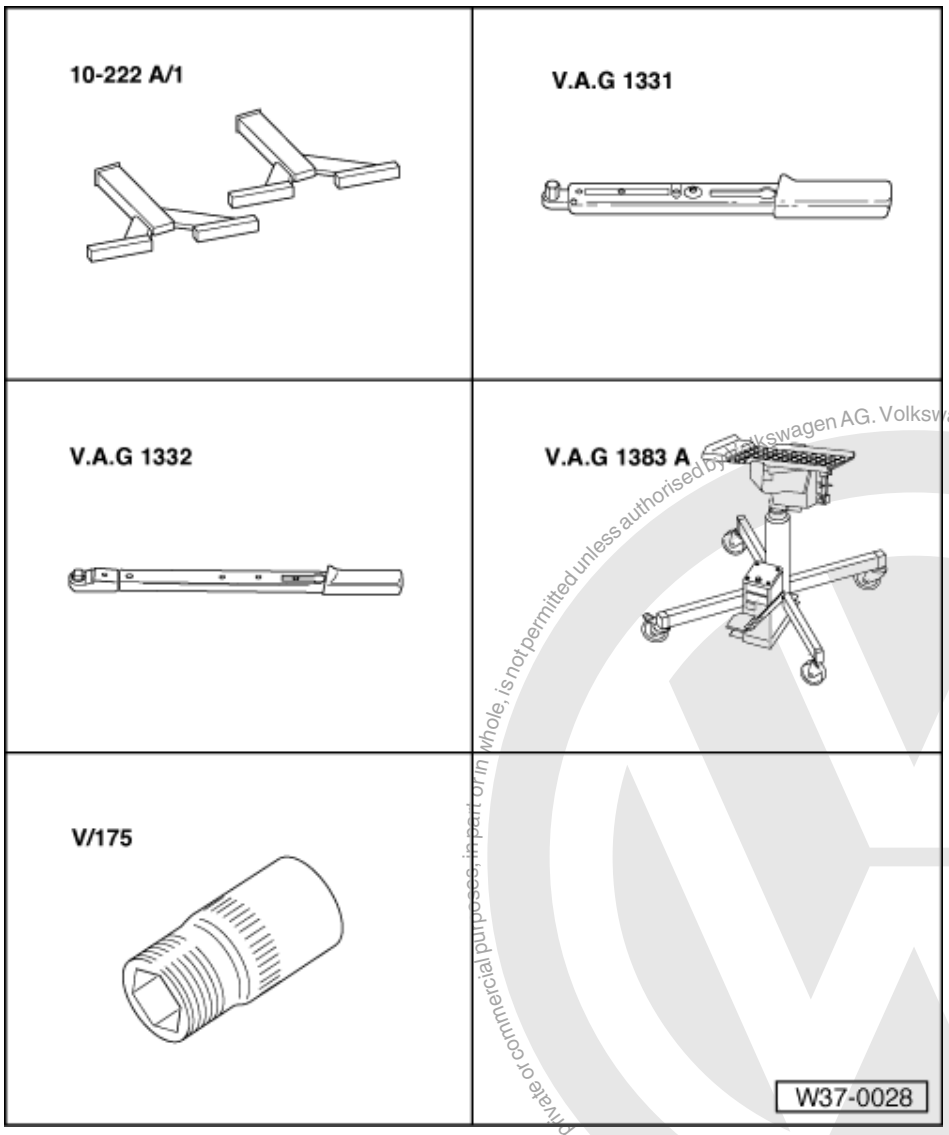

- 10-222 A/1 Support
- V.A.G 1331 Torque wrench
- V.A.G 1332 Torque wrench
- V.A.G 1383 A Engine/gearbox jack
- V/175 Socket

Removing gearbox

- Selector lever in "P" position.
- Remove left-hand drive shaft/wheel hub bolt.
- Remove front left wheel bolts.
- Obtain radio code on vehicles with coded radio.
- Install battery.
- Remove battery console.

Protected by copyright. Copying for private or commercial purposes, in part or in whole, is not permitted unless authorised by Volkswagen AG. Volkswagen AG does not guarantee or accept any liability with respect to the correctness of information in this document. Copyright by Volkswagen AG.
satelettronica

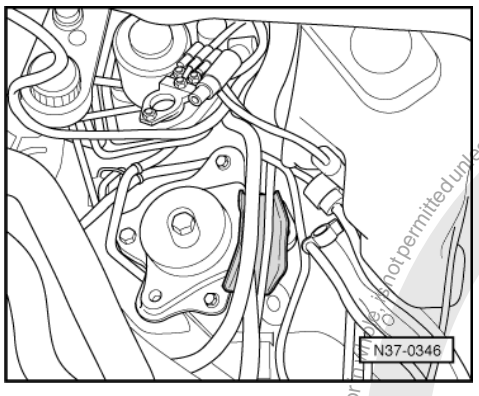

Vehicles up to 06.99

- -> Remove cable guide rail.

Continued for all vehicles

- Remove radiator fan control unit.
- Remove air cleaner.

Vehicles up to 06.99

- Remove selector lever cable from gearbox => page 42 (29 - Corrugated locking element).

Vehicles from 07.99

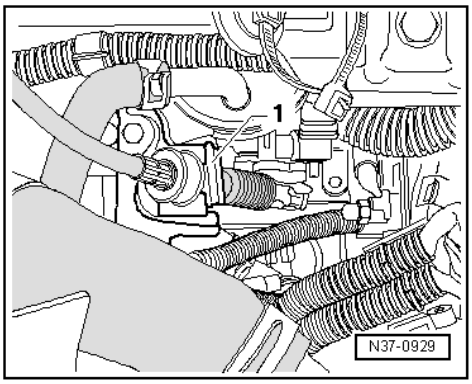

- -> Remove corrugated locking element -1-.

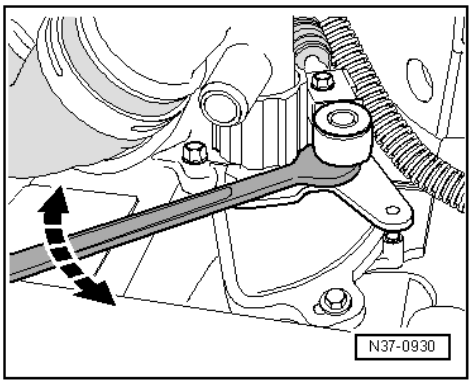

- -> Lever off selector lever cable.

Protected by copyright. Copying for private or commercial purposes, in part or in whole, is not permitted unless authorised by Volkswagen AG. Volkswagen AG does not guarantee or accept any liability with respect to the correctness of information in this document. Copyright by Volkswagen AG.
satelettronica

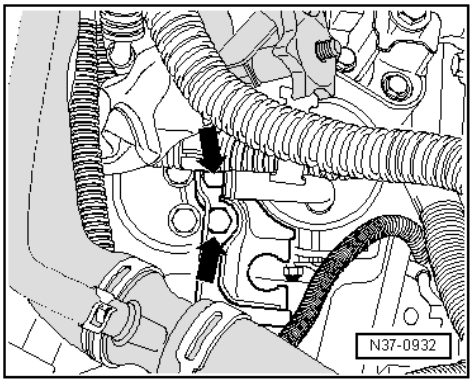

- -> Remove selector lever cable support bracket from gearbox -arrows-.

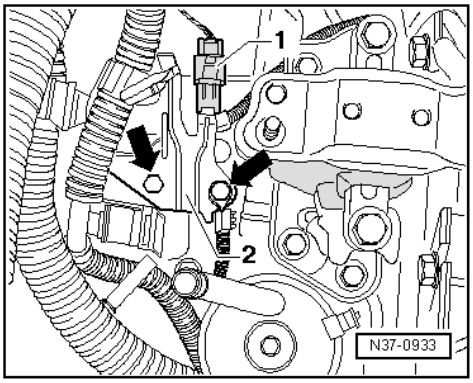

- -> Remove connector -1- from holder -2-.
- Remove holder from gearbox -arrows-.

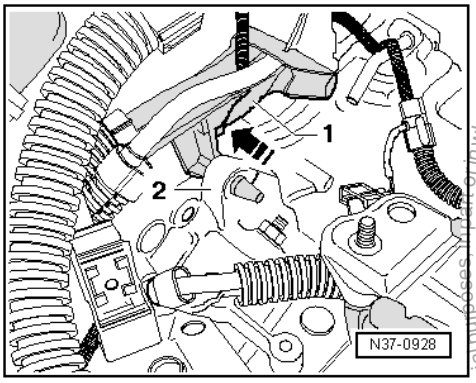

- -> Pull cable guide rail -1- out of eye -2-.

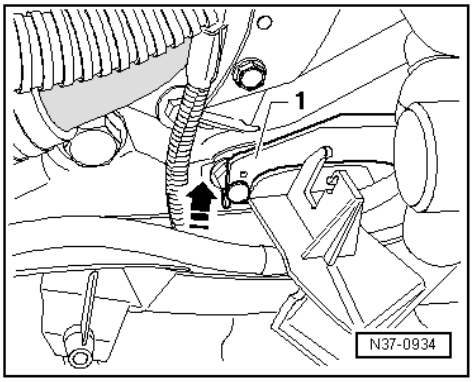

Protected by copyright. Copying for private or commercial purposes, in part or in whole, is not permitted unless authorised by Volkswagen AG. Volkswagen AG does not guarantee or accept any liability with respect to the correctness of information in this document. Copyright by Volkswagen AG.
satelettronica

- -> Pull cable guide rail -1- off engine/gearbox bolt.

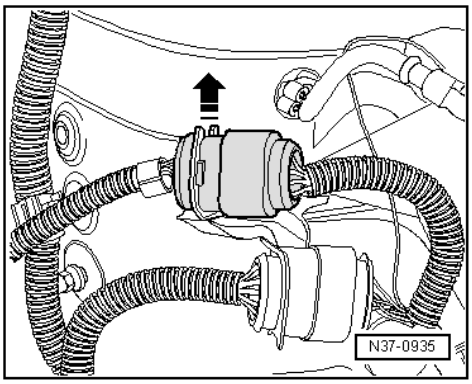

- -> Remove connector from holder on suspension strut turret and separate.

Continued for all vehicles

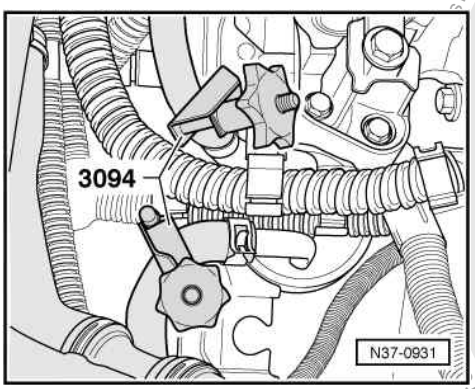

- -> Clamp both ATF cooler hoses using -3094- and remove from ATF cooler.
- Remove upper engine/gearbox connecting bolts.

Vehicles from 07.99

- Remove upper starter motor bolt.

Continued for all vehicles

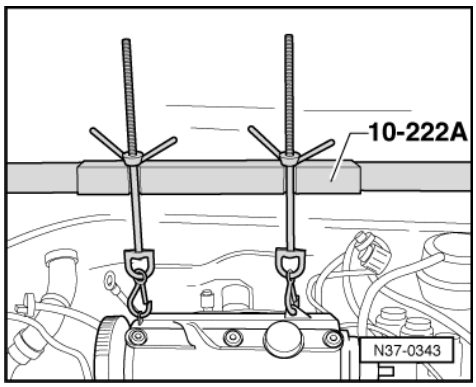

- -> Fit support bar 10-222 A with legs 10-222 A/1 and support engine/gearbox in this position.
- Remove heat shield for front pipe.
- Disconnect Lambda probe and remove front pipe/catalyst.
- Remove ribbed V-belt cover.
- Remove front left wheel.
- Disconnect drive shafts at flanges.
- Remove left-hand drive shaft.

Protected by copyright. Copying for private or commercial purposes, is not permitted unless authorised by Volkswagen AG. Volkswagen AG does not guarantee or accept any liability with respect to the correctness of information in this document. Copyright by Volkswagen AG.
satelettronica

=> Running gear; Repair group 40; Removing and installing drive shaft Removing and installing drive shaft

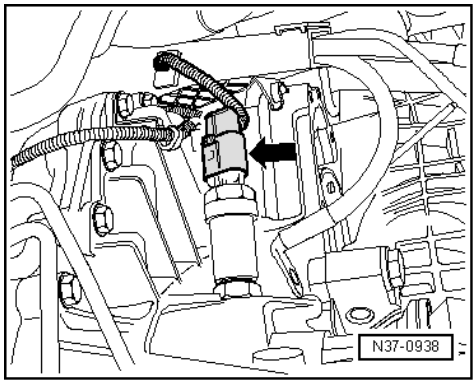

- -> Remove speedometer connector -arrow-.
- Remove oil pan cover plate.

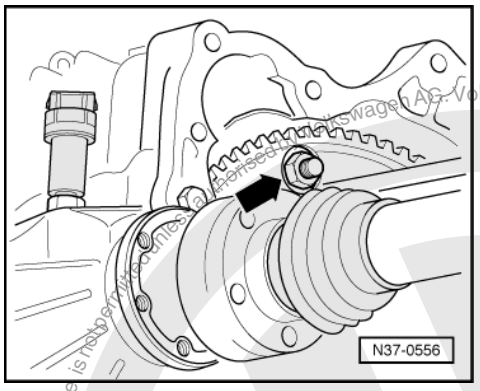

- -> Remove torque converter cover plate and nuts (qty. 3) from torque converter.
- Remove pendulum support.
- Renew bolts

Vehicles up to 06.99

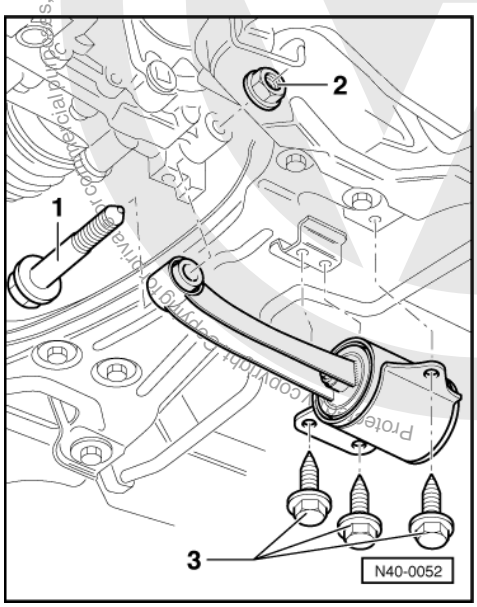

- -> Remove pendulum support, to do this remove bolts -3- and nut -2- and take out bolt -1-.
- Renew bolts

satelettronica

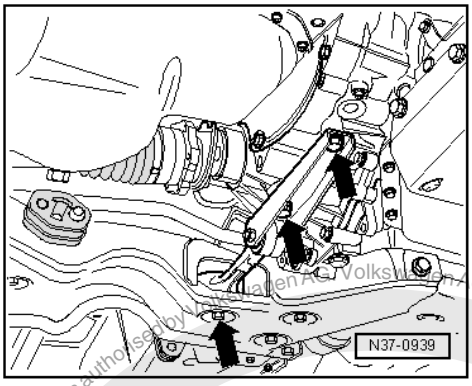

Vehicles from 07.99

- -> Remove pendulum support.
- Renew bolts

Continued for all vehicles

- Disconnect electrical connections on gearbox.

Vehicles up to 06.99

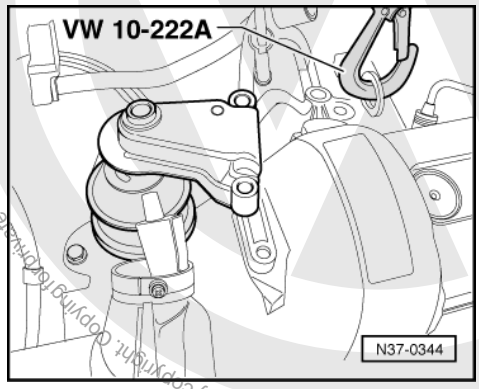

- -> Remove upper right-hand assembly mounting.
- Remove ribbed V-belts, to do this lower engine/gearbox via right-hand support device spindle slightly.
- Remove ribbed V-belt pulley.
- Lower engine/gearbox via support device spindles until the left-hand assembly mounting bolts are accessible.

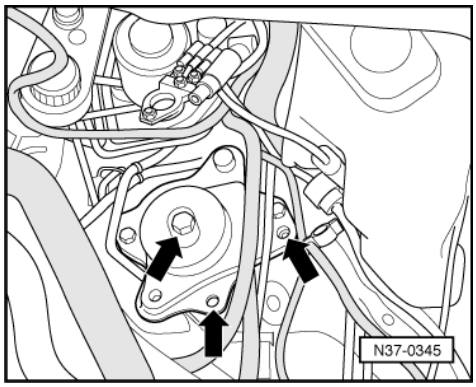

- -> Remove left assembly mounting complete.
- Renew bolts

Copyright by Volkswagen AG. Volkswagen AG does not guarantee or accept any liability with respect to the correctness of information in this document. Copyright by Volkswagen AG. Copyright. Copying for private or commercial purposes, in part or in whole, is not permitted unless authorised by Volkswagen AG.
satelettronica

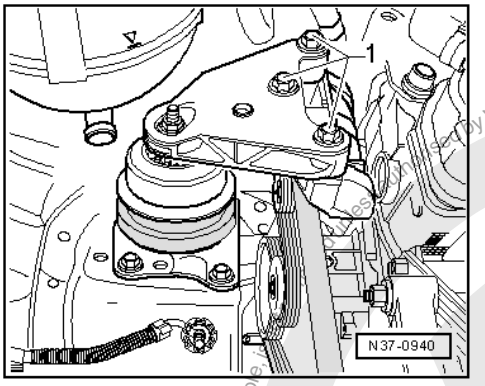

Vehicles from 07.99

- -> Remove upper right-hand assembly mounting -1-.
- Renew bolts

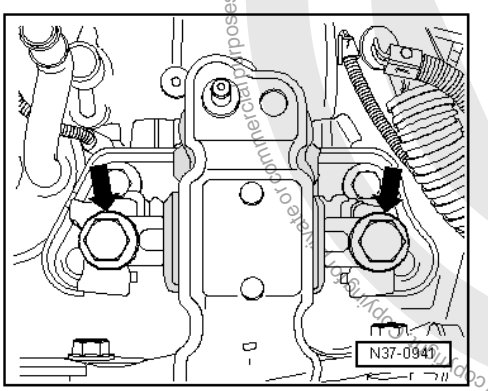

- -> Remove left assembly mounting complete.

Continued for all vehicles

- Remove power steering pipes from radiator.

Do not open pipework !

- Remove electrical wiring retainer on rear of engine.
- Remove fan wheel.

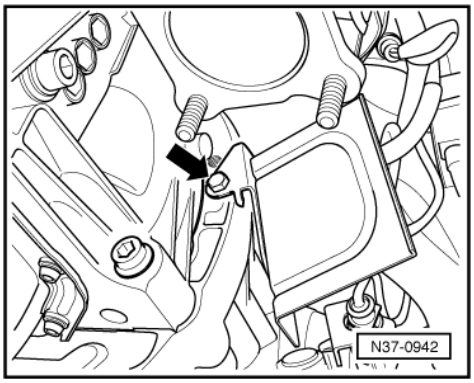

- -> If a heat shield is fitted, remove heat shield.
- Set up gearbox mount 3282.

The gearbox mount 3282 is set up with the adjusting plate 3282/24 for removing the automatic gearbox 001.

- Move jack V.A.G 1383 A with gearbox mount 3282 under the gearbox and support gearbox.

Copyright by Volkswagen AG. Volkswagen AG does not guarantee or accept any liability with respect to the correctness of information in this document. Copyright by Volkswagen AG.
Provided by coordinated copying service for private or commercial purposes, in part or in whole, is not permitted unless authorized by Volkswagen AG.
satelettronica

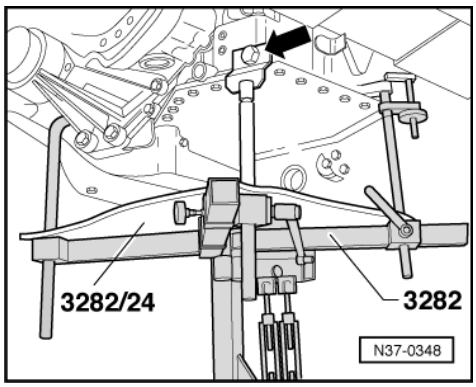

- -> Secure gearbox mounting 3282 with drilled plate to hole on gearbox -arrow-.
- Remove lower engine/gearbox connecting bolts.
- Press gearbox off engine; when doing this, press torque converter out of drive plate.
- Press torque converter against ATF pump.
- Lower engine and gearbox until the tensioning roller of the engine can be guided passed the longitudinal member.
- Lower gearbox slightly.
- Swivel gearbox and carefully lower.
- Secure torque converter to prevent it falling out.

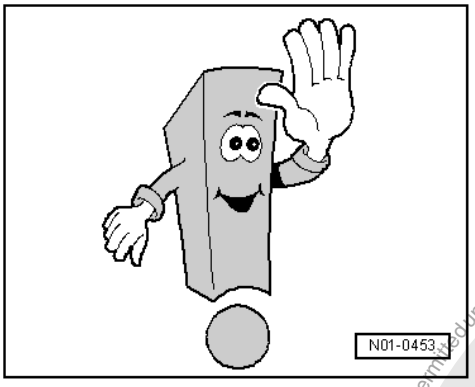

Installing gearbox

Install in reverse order but note following:

- Installing torque convertor -> Page 14 .

When swinging in gearbox, ensure that the torque converter does not slip out of position.

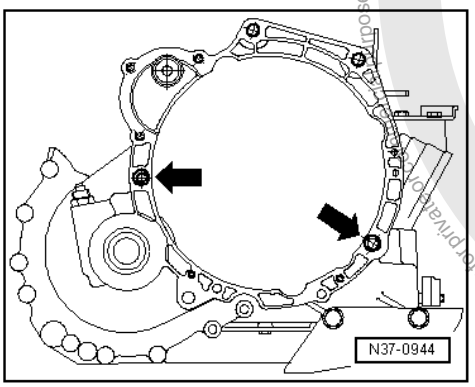

- -> Before installing gearbox, ensure that the dowel sleeves are correctly located between engine and gearbox.
- When installing gearbox, observe torque converter contact impression on drive plate.

satelettronica
Copyright by Volkswagen AG. Volkswagen AG does not guarantee or accept any liability with respect to the correctness of information in this document. Copyright by Volkswagen AG. Copying for private or commercial purposes, in part or in whole, is not permitted unless authorised by Volkswagen AG.

- Before tightening screws/bolts, check whether they need renewing. In particular, bolts other than those used on the gearbox often require renewal.

The bolts from assembly mountings and suspension systems are affected in most cases. Check relevant repair groups for further details.

To ensure smooth and quiet running of this Volkswagen, it is important that the engine and gearbox are installed free of tension. For information on how to do this

=> Repair group 10; Removing and installing engine Removing and installing engine

Information about torque settings of assembly mounting bolts and the exhaust system can also be found here.

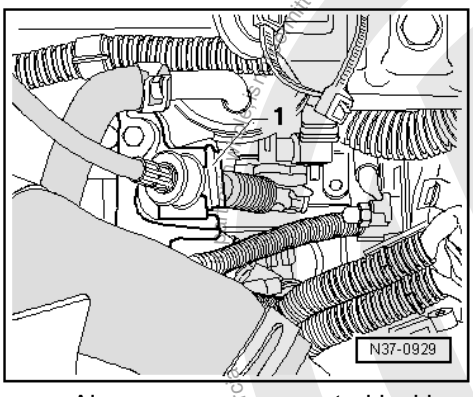

- -> Always renew corrugated locking element -1- of selector lever cable.
- Check selector lever cable adjustment, adjust if necessary => Page 35 .
- Checking multi-function switch adjustment and adjust if necessary.

=> Self-diagnosis for automatic gearbox 001; Repair group 01; Performing self-diagnosis; Adjusting multi-function switch Performing self-diagnosis Adjusting multi-function switch

- Perform self-diagnosis and initiate basic setting.

=> Self-diagnosis for automatic gearbox 001; Repair group 01; Performing self-diagnosis; Initiating basic setting Performing self-diagnosis Initiating basic setting

- Enter radio code.

=> Radio, Telephone, Navigation; Repair group 91; Radio systems Radio systems

- Check and top up ATF level =>Page 76 .
- Check all electrical connections; cover/seal must prevent ingress of moisture (visual check).

Tightening torques

Left-hand console for assembly mounting to gearbox 25 Nm

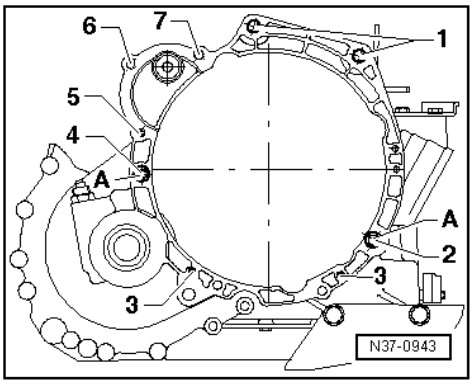

satelettronica

-> Gearbox to engine

Item	Bolt	Qty.	Nm
1	M 12 x 55 AF 19 mm	2	80
	M 12 x 65 AF 18 mm -for alu engine-	2	80
2	M 10 x 62	1	45
	M 10 x 75 -for alu engine-	1	45
3	M 7 x 12	2	15
4	M 12 x 64 AF 19 mm	1	80
	M 12 x 64 AF 18 mm -for alu engine-	1	80
5, 6, 7	M 8 x 35	3	25

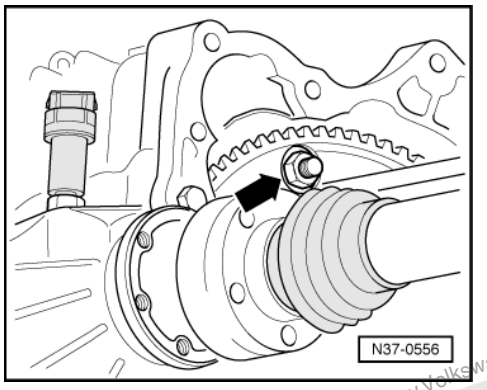

-> Torque converter to drive plate 85 Nm

Torque settings for running gear:

Driveshaft to flanged shaft, swivel joint to wishbone, coupling rod to wishbone, assembly mounting including pendulum support

=> Running gear; Repair group 40

Wheel bolts

=> Running gear; Repair group 44; Wheel bolt torque settings Wheel bolt torque settings

Steering

=> Running gear; Repair group 48

Engine torque settings:

=> Repair group 10; Removing and installing engine Removing and installing engine

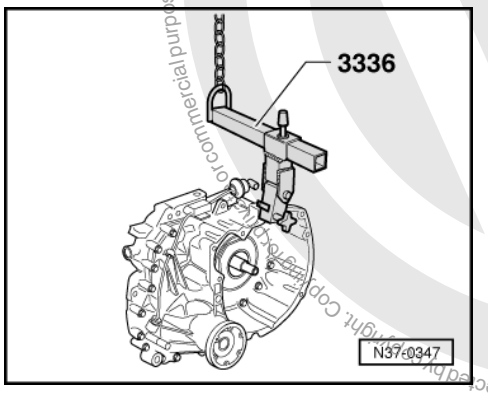

satelettronica
Protected by Copyright. Copyright by Volkswagen AG. Volkswagen AG does not guarantee or accept any liability with respect to the correctness of information in this document. Copyright by Volkswagen AG.

Transporting the automatic gearbox

Special tool 3336 may be used to transport the automatic gearbox and also when setting up gearbox mount 3282.

- -> Secure special tool 3336 to gearbox housing flange.
- Position pins so that 10 holes are visible in chain direction.

4 - Checking ATF level and topping up

4.1 - Checking ATF level and topping up

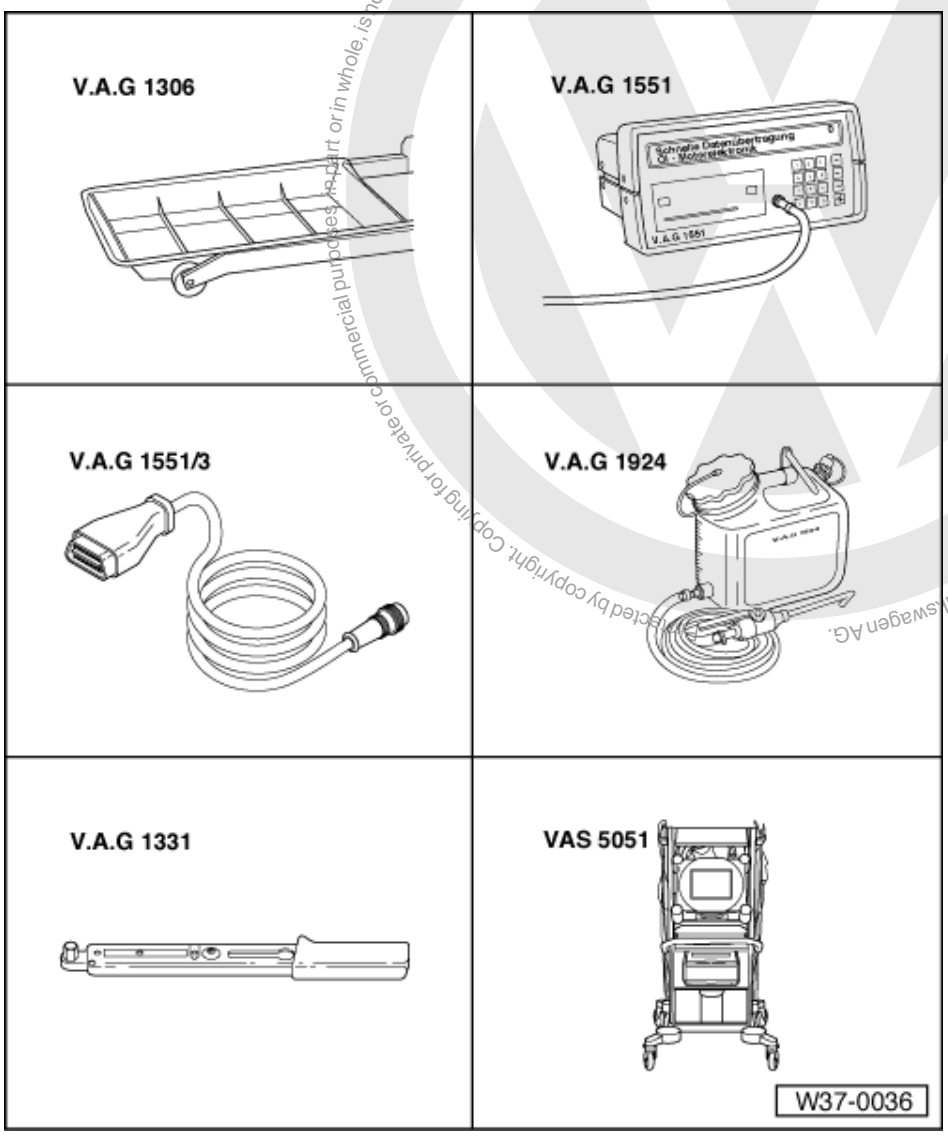

Special tools and workshop equipment required

- V.A.G 1306 Drip tray
- V.A.G 1551 Fault reader
- V.A.G 1551/3 Cable
- V.A.G 1924 Reservoir
- V.A.G 1331 Torque wrench
- VAS 5051 Vehicle diagnosis, testing and information system

Protected by copyright. Copying for private or commercial purposes, in part or in whole, is not permitted unless authorised by Volkswagen AG. Volkswagen AG does not guarantee or accept any liability with respect to the correctness of information in this document. Copyright by Volkswagen AG.
satelettronica

- Diagnosis cable VAS 5051/3

Additional information required

- Workshop Manual Polo 1995 ▸, Self-diagnosis for automatic gearbox 001

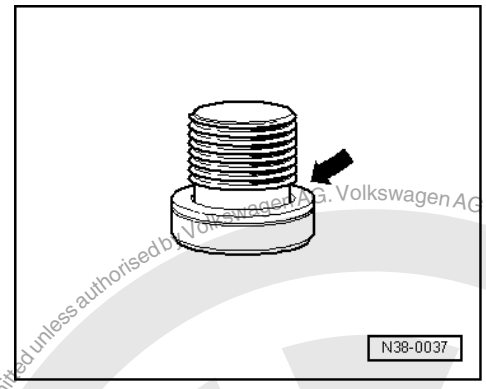

If ATF needs to be topped up, then only ATF with a Part number

G 052 990 A2

may be used.

- -> If the ATF level is checked the seal -arrow- on the ATF level plug must always be renewed.

Checking ATF level

Conditions for performing check

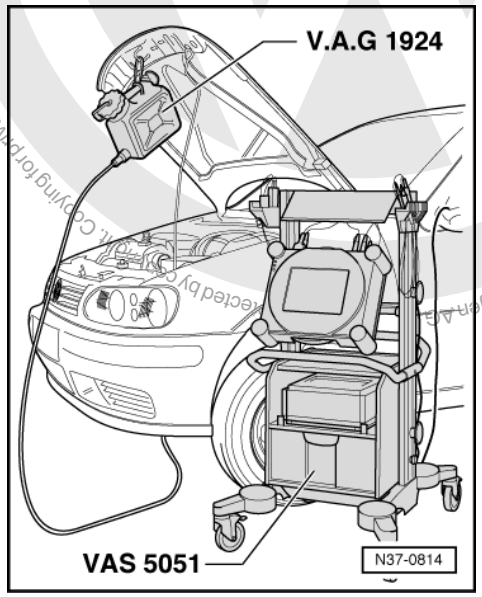

- Gearbox not emergency running, ATF temperature not above approx. 30°C
- Vehicle level
- Selector lever at "P"

- -> Secure reservoir of ATF filling system V.A.G 1924 to vehicle.
- Connect VAS 5051 and progress until the diagnosis functions are displayed.

Copyright by Volkswagen AG. Volkswagen AG does not guarantee or accept any liability with respect to the correctness of information in this document. Copying for private or commercial purposes, in part or in whole, is not permitted unless authorised by Volkswagen AG.
satelettronica

=> Self-diagnosis for automatic gearbox 001; Repair group 01; Performing self-diagnosis; Connecting Vehicle Diagnosis, Testing and Information System VAS 5051 Performing self-diagnosis Connecting Vehicle Diagnosis, Testing and Information System VAS 5051

Locations of diagnosis connections => from page 22 .

- Start engine.
- Raise vehicle.
- Place container under the gearbox.
- Press 08 - Read measured value block
- Press keys 0 0 and 2 on display. (002 selects the "Display group number 002".)
- Confirm entry with key Q.

Indicated on display (example)			
Display zones are ordered vertically	Display group No.	Display zone	Description
Read measured value block 0 % 34 % 30.0°C 14.1V	002	1 = 2 = 3 = 4 =	Accelerator pedal value Solenoid valve 6 -N93- (regulation in %) ATF temperature Battery voltage

The third display zone shows the ATF temperature.

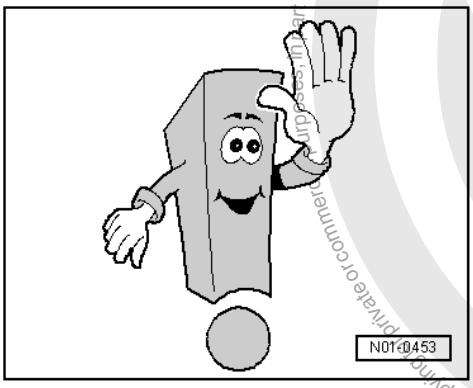

The ATF temperature must not be more than approx. 30 °C at start of test.

- Bring ATF to test temperature.

Test temperature: 35 °C to 45 °C

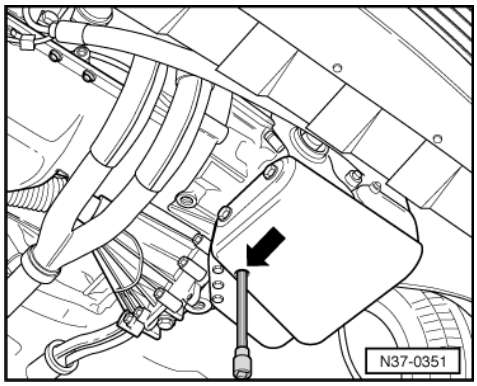

- -> Remove ATF level plug from the oil pan (arrow).

The ATF present in the overflow pipe runs out.

Protected by copyright. Copying for private or commercial purposes, in part or in whole, is not permitted unless authorised by Volkswagen AG. Volkswagen AG does not guarantee or accept any liability with respect to the correctness of information in this document. Copyright by Volkswagen AG.
satelettronica

ATF drips out of drilling:

ATF need not be topped up.

- Fit new seal to plug and tighten to 15 Nm. Herewith is the ATF check completed.

If only the ATF present in the overflow pipe runs out of drilling:

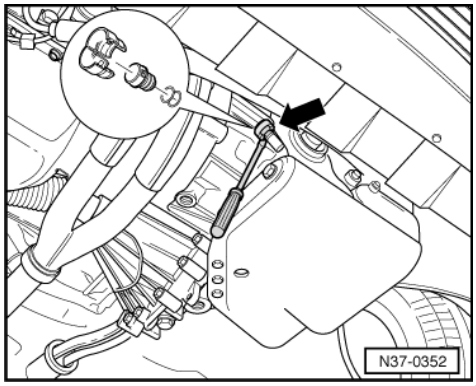

Replenishing ATF

- Lever off plug securing cap -arrow- with a screwdriver. When doing this the cap locking device will be damaged, therefore always renew cap.
- -> Pull plug out of filler pipe.

On some gearboxes a cap with a spring retainer is installed. This cap can be used again.

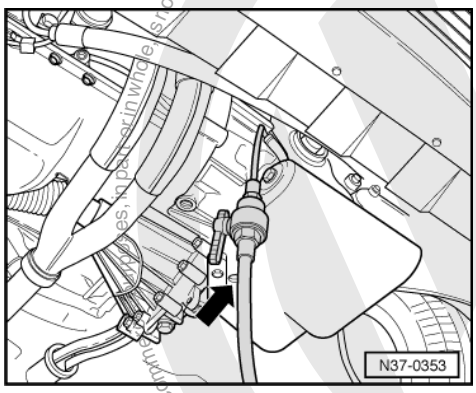

- -> Fill with ATF using V.A.G 1924, until ATF runs out of level hole -arrow-.

Warning!
If the ATF level is too high or too low it will adversely affect the operation of the gearbox.

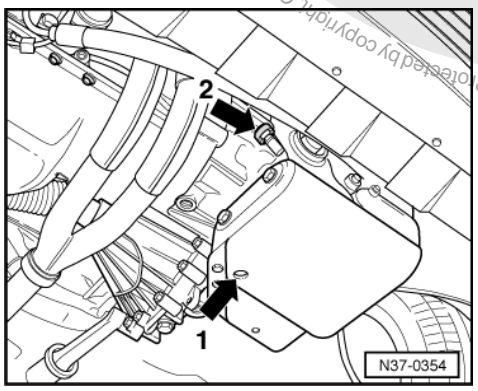

Protected by copyright. Copying for private or commercial purposes, in part or in whole is not permitted unless authorised by Volkswagen AG. Volkswagen AG does not guarantee or accept any liability with respect to the correctness of information in this document. Copyright by Volkswagen AG.
satelettronica

- -> Fit new seal to level plug -arrow 1- and tighten to 15 Nm.
- Fit sealing plug on filler pipe until the spring retainer lock locates, or
- Fit plug on filler pipe and secure with a new cap -arrow 2-.
- Lock cap.

Warning!
Always renew cap. The cap secures the plug.

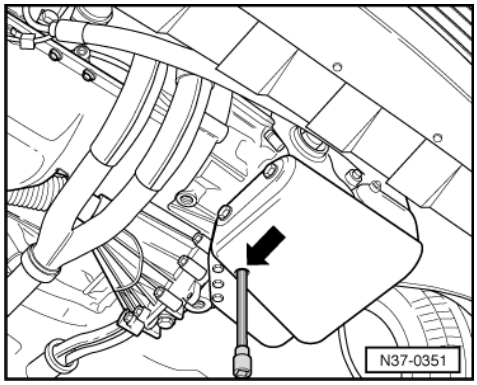

Draining and replenishing ATF

- -> Remove ATF level plug from oil pan (arrow).
- Remove overflow pipe (gold colour) through the level hole.
- Drain ATF.
- Install overflow pipe.
- Screw level plug in hand-tight.

If ATF needs to be topped up, then only ATF with a Part number

G 052 990 A2

may be used.

- Fill with 2 ltrs. of ATF (G 052 990 A2) through filler pipe.
- Then start engine and shift through all the selector lever positions with the vehicle stationary.
- Check and replenish ATF level =>from Page 76 .

Protected by copyright. Copying for private or commercial purposes, part or in whole, is not permitted unless authorised by Volkswagen AG. Volkswagen AG does not guarantee or accept any liability with respect to the correctness of information in this document. Copyright by Volkswagen AG.
satelettronica

5 - Gearbox with selector elements

5.1 - Gearbox with selector elements

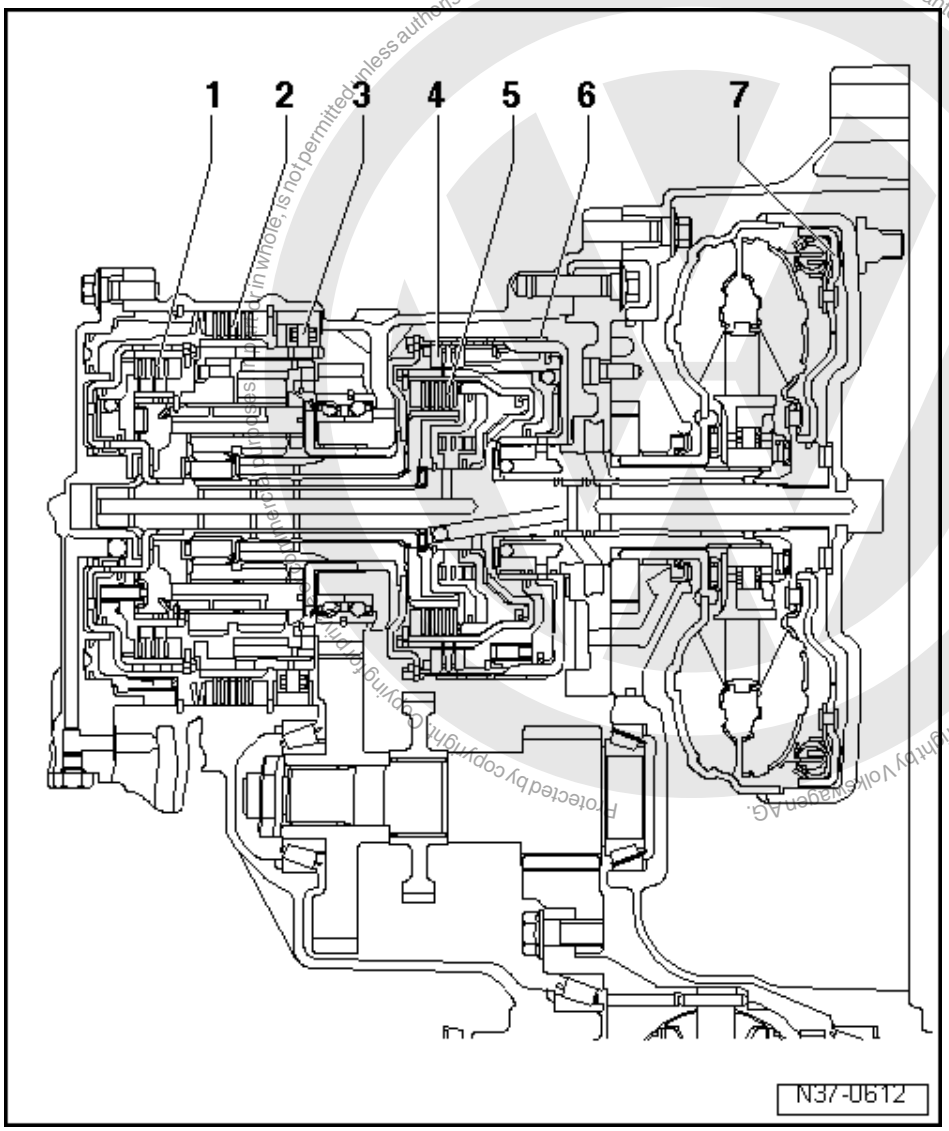

Protected by copyright. Copying for private or commercial purposes, in whole, is not permitted unless authorised by Volkswagen AG. Volkswagen AG does not guarantee or accept any liability with respect to the correctness of information in this document. Copyright by Volkswagen AG.

satelettronica

Position of coupling elements

1 = 3rd and 4th gear clutch -K3-

2 = Reverse gear brake -B1-

3 = Free-wheel

4 = Reverse gear clutch -K2-

5 = 1st to 3rd gear clutch -K1-

6 = 2nd and 4th gear brake -B2-

7 = Lock-up clutch integrated in torque converter -LC-

Before starting repairs to the gearbox, first carry out the self-diagnosis => Repair Group 01.

5.2 - Position of coupling elements

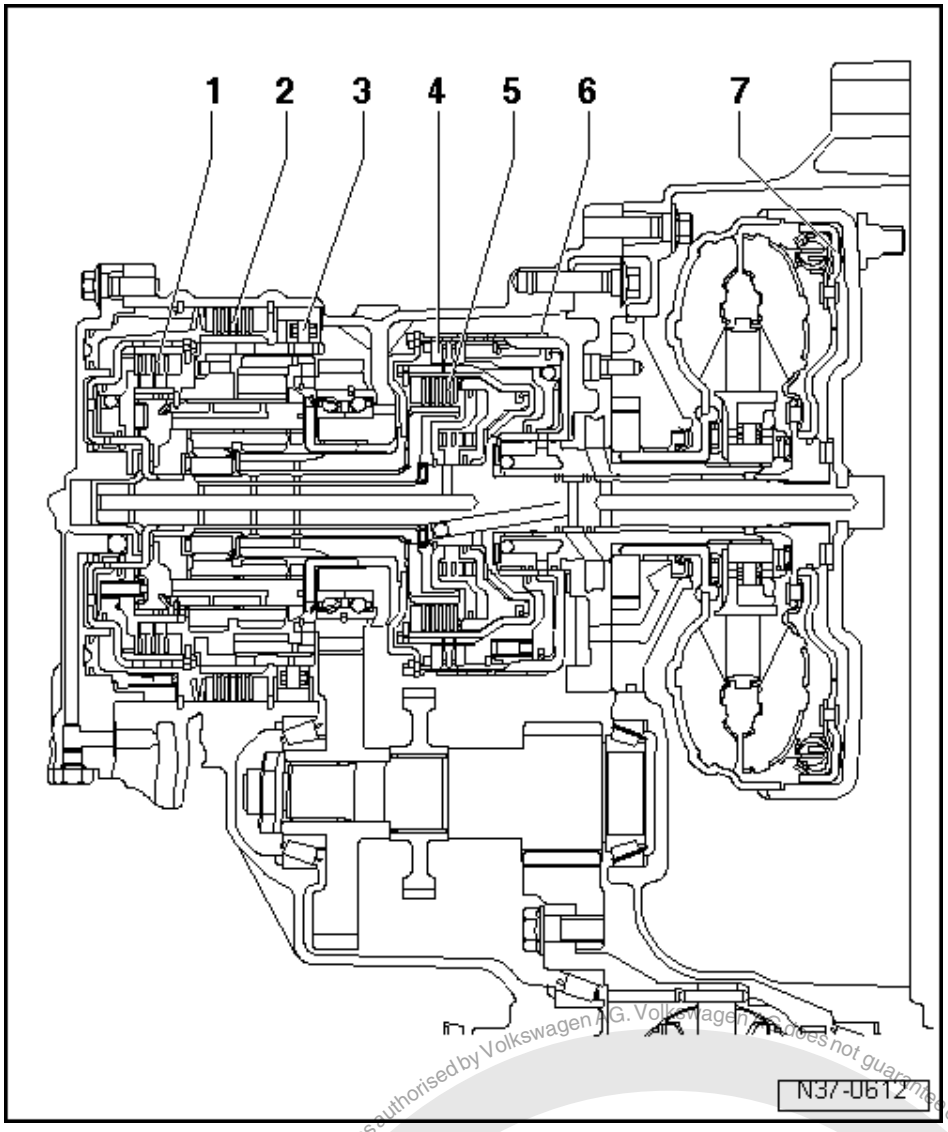

The following table shows which coupling elements are operated in the individual gears to help you deal with complaints regarding poor acceleration and speed performance or generally with drive train faults. The table makes it possible to determine which coupling elements are not operating properly.

All gears will be shifted hydraulically.

At a predetermined load and speed, the 3rd and 4th forward gears are driven mechanically by the torque converter lock-up clutch.

Protected by copyright. Copying for private or commercial purposes, in part or in whole, not permitted unless authorised by Volkswagen AG. Volkswagen AG does not guarantee or accept any liability with respect to the correctness of information in this document. Copyright by Volkswagen AG.
satelettronica

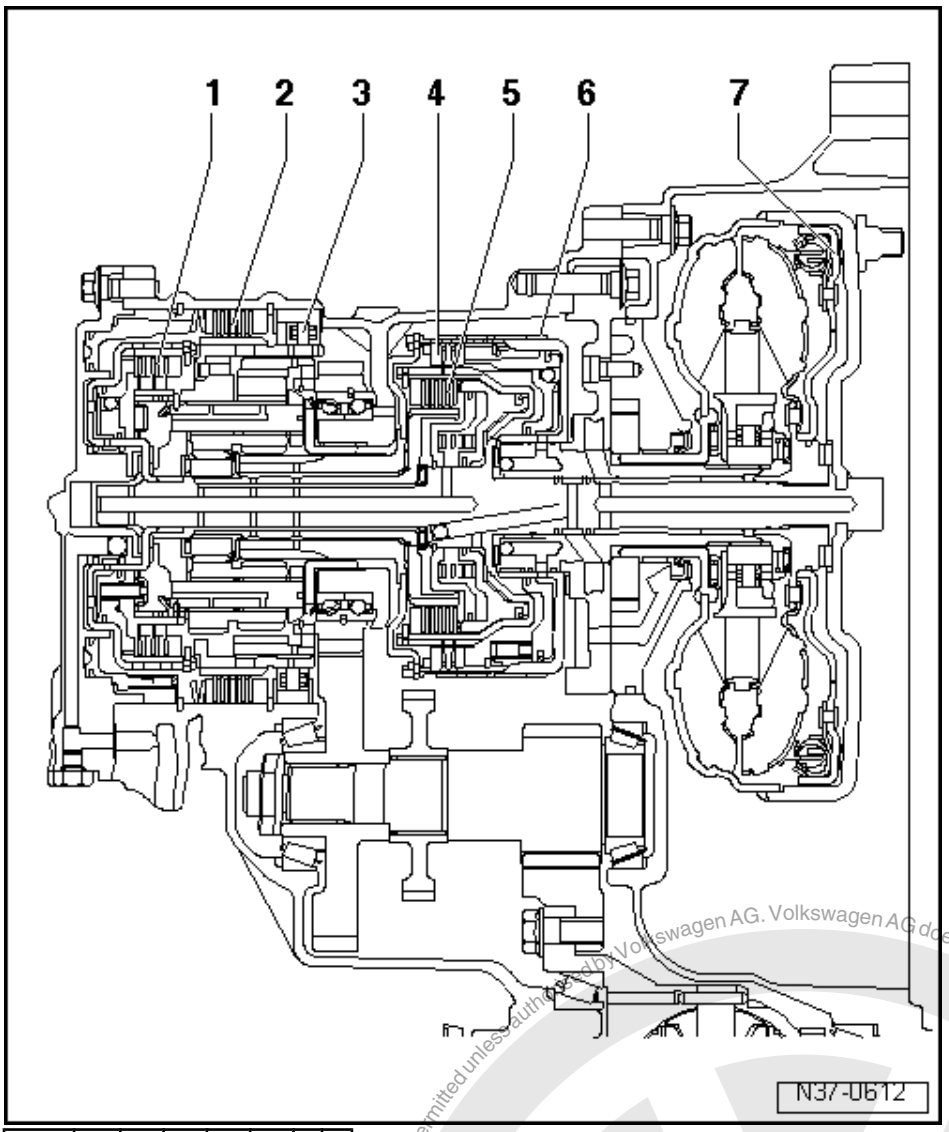

Gear	B1	B2	K1	K2	K3	F	LC
R	X			X			
1H	(X)		X			X	
2H		X	X				
3H			X		X		
3M			X		X		X
4H		X			X		
4M		X			X		X

X = Closed clutches, brakes or free-wheel
(X) = The -B1- brake is only used as an engine brake in selector lever position "1"
H = Hydraulic
M = Mechanical

Protected by copyright. Copying for private or commercial purposes, in part or in whole, is not permitted unless authorised by Volkswagen AG. Volkswagen AG does not guarantee or accept any liability with respect to the correctness of information in this document. Copyright by Volkswagen AG.
satelettronica

6 - Dismantling and assembling gearbox

6.1 - Dismantling and assembling gearbox

Removing and installing ATF cooler and ATF filler tube => Page 85 .

Dismantling and assembling planetary gearbox -Overview- => Page 86 .

Dismantling and assembling planetary gearbox => Page 96 .

Dismantling => Page 96
Assembling gearboxes up to 06.99 => page 107
Assembling gearboxes from 07.99 => page 115

Overview of all planetary gearbox adjustments => Page 124 .

Removing and installing valve chest => Page 164 .

6.2 - Removing and installing ATF cooler and ATF filler tube

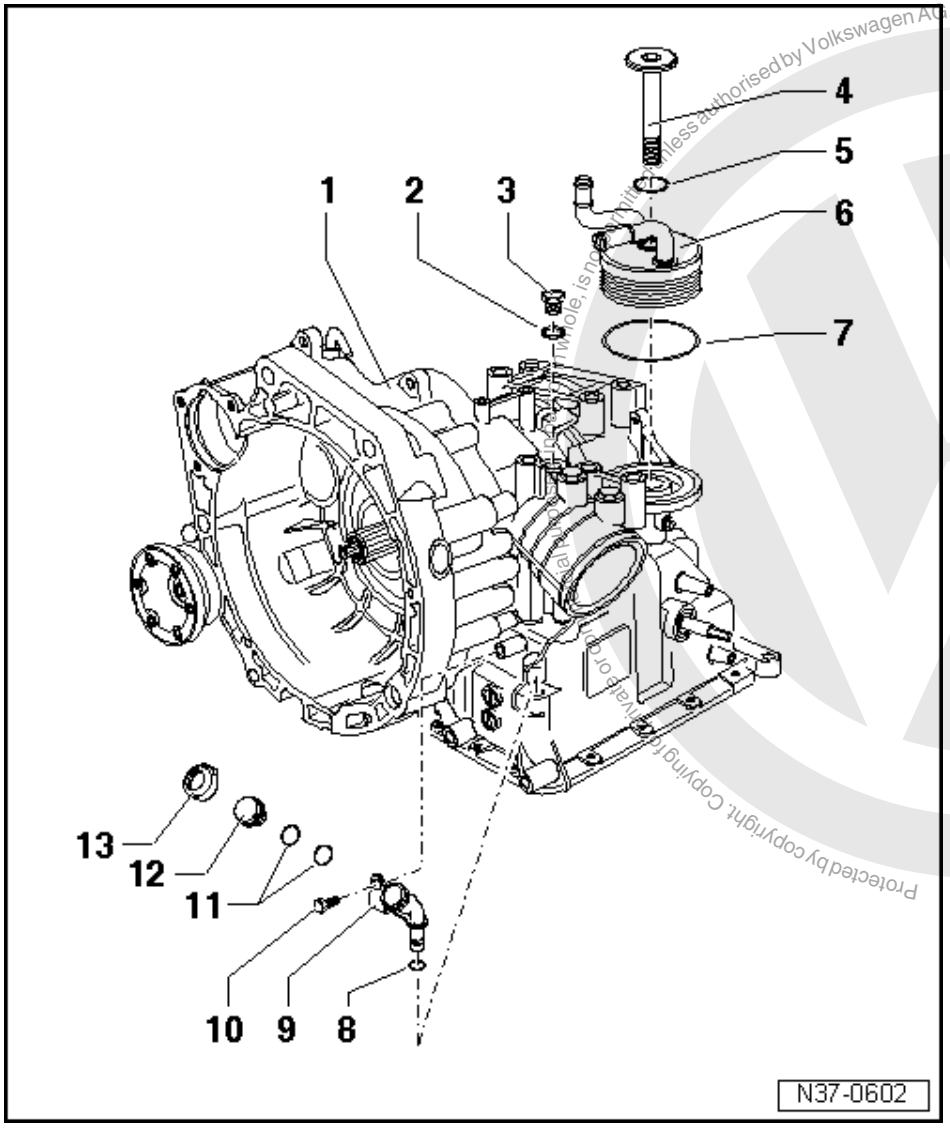

Protected by copyright. Copying for private or commercial purposes, in whole or in part, is not permitted unless authorised by Volkswagen AG. Volkswagen AG does not guarantee or accept any liability with respect to the correctness of information in this document. Copyright by Volkswagen AG.
satelettronica

Protected by copyright. Copying for private or commercial purposes, in part or in whole, is not permitted unless authorised by Volkswagen AG. Volkswagen AG does not guarantee or accept any liability with respect to the correctness of information in this document. Copyright by Volkswagen AG.

1 Gearbox housing
2 O-ring
- Always renew

3 Plug, 8 Nm
4 Bolt, 25 Nm
5 O-ring
- Always renew

6 ATF cooler
7 O-ring
- Always renew

8 O-ring
- Always renew

9 ATF filler tube

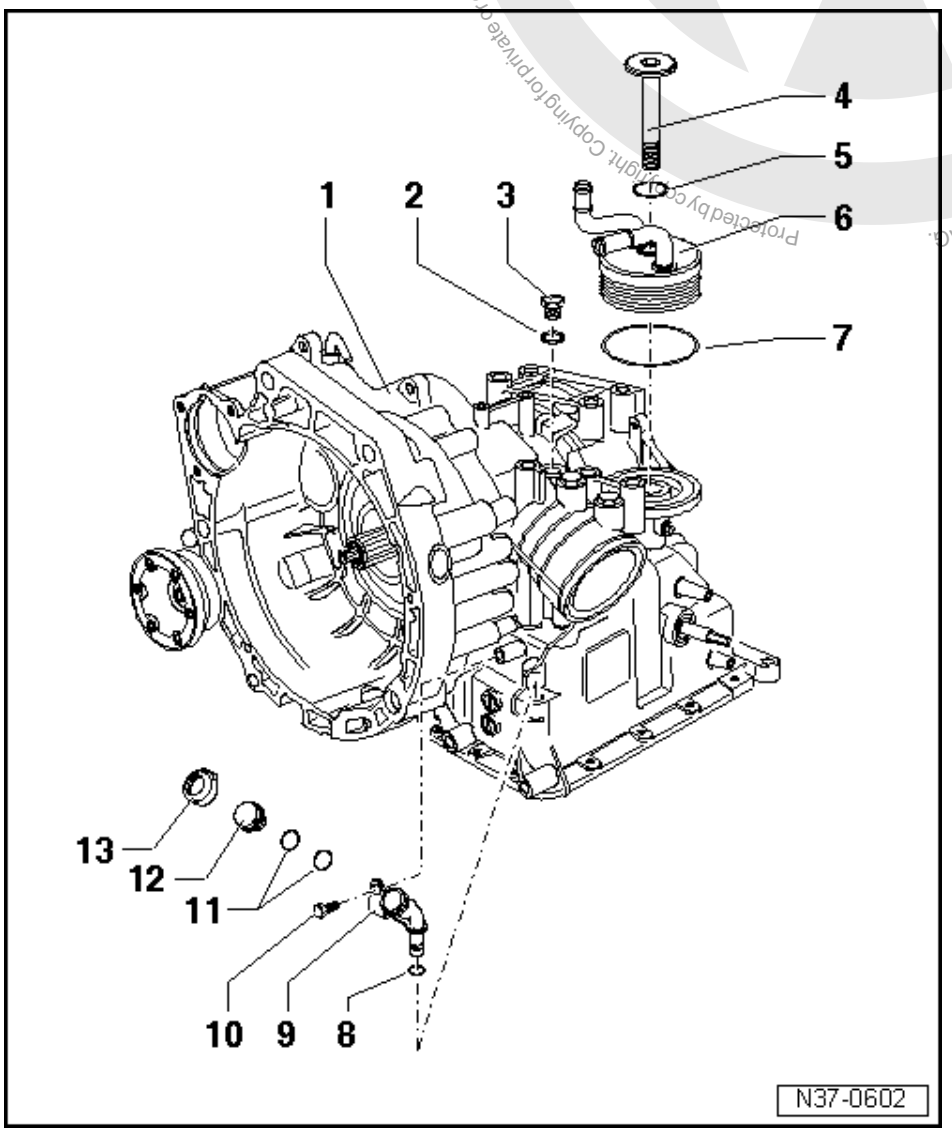

10 Bolt, 8 Nm
11 O-ring
- Always renew

12 Plug
13 Cap

satelettronica

- To secure the level plug after checking ATF level => Page 76 always renew

6.3 - Dismantling and assembling planetary gearbox -Overview-

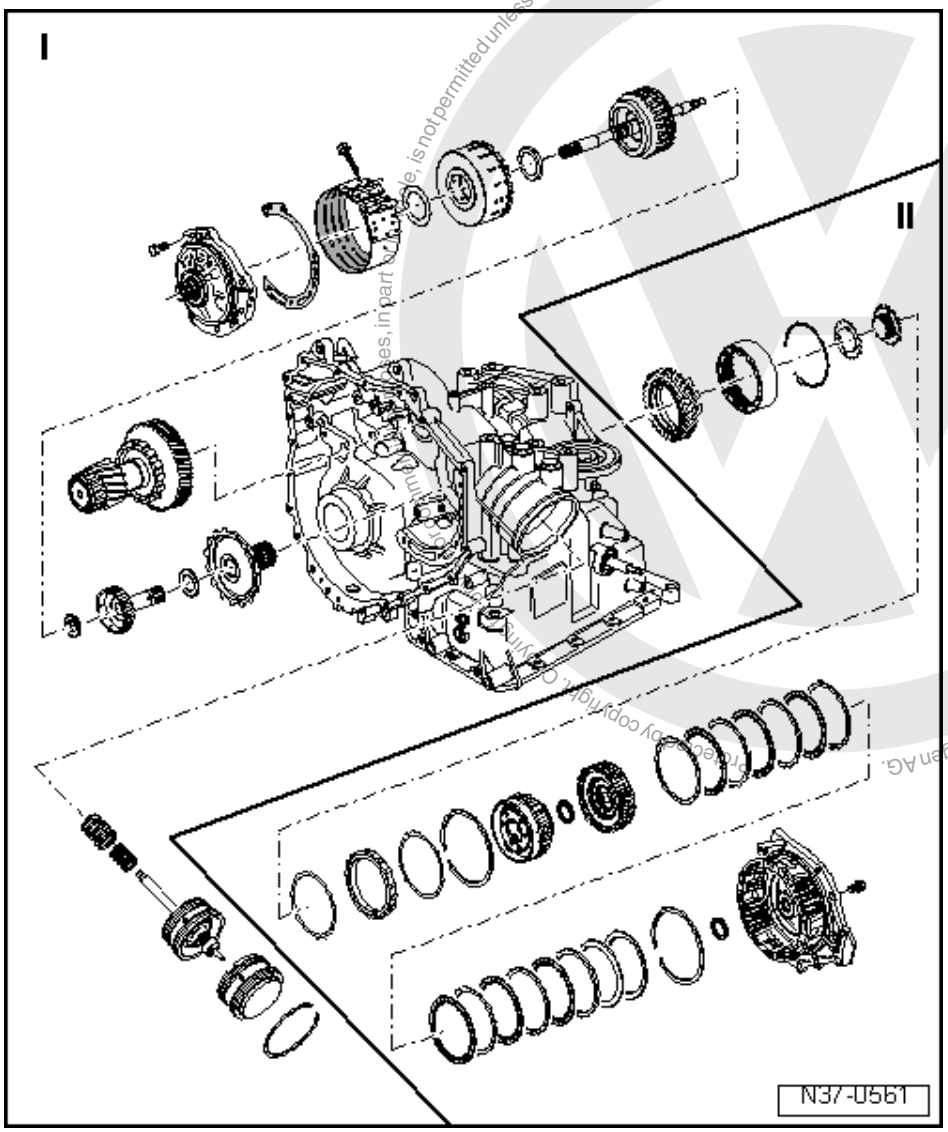

Dismantling planetary gearbox => Page 96 ,

Assembling gearboxes up to 06.99 => page 107 .

Assembling gearboxes from 07.99 => page 115

Position of the shims and axial needle bearings in planetary gearbox => Page 96

I - Removing and installing ATF pump up to large sun wheel =>page 87

II - Removing and installing gearbox housing cover up to input gear =>page 91

Copyright by Volkswagen AG. Volkswagen AG does not guarantee or accept any liability with respect to the correctness of information in this document. Copyright by Volkswagen AG.
satelettronica

6.4 - I - Removing and installing ATF pump up to large sun wheel

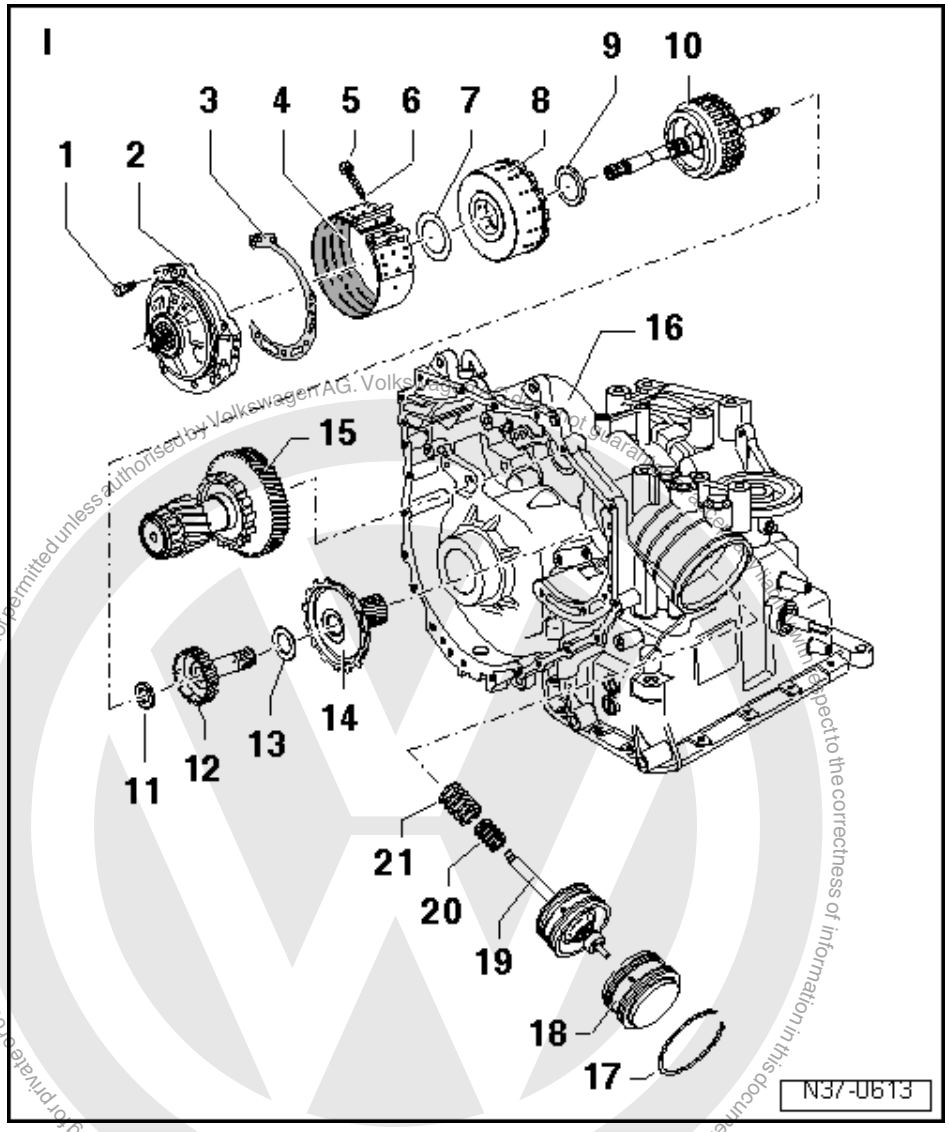

=> Overview, Page 86

Dismantling planetary gearbox => Page 96 .

Assembling gearboxes up to 06.99 => page 107 .

Assembling gearboxes from 07.99 => page 115

1 Bolt, 20 Nm

2 ATF pump
- Dismantling and assembling => Page 139

3 Gasket
- For ATF pump

4 Brake band -B2-
- 2nd and 4th gear -brake-
- Adjusting => Page 131
- Store in fitted position => Page 102

satelettronica

- Fit piston push rod -item 19 - and adjustment screw -item 6 - in the formed part of the brake band

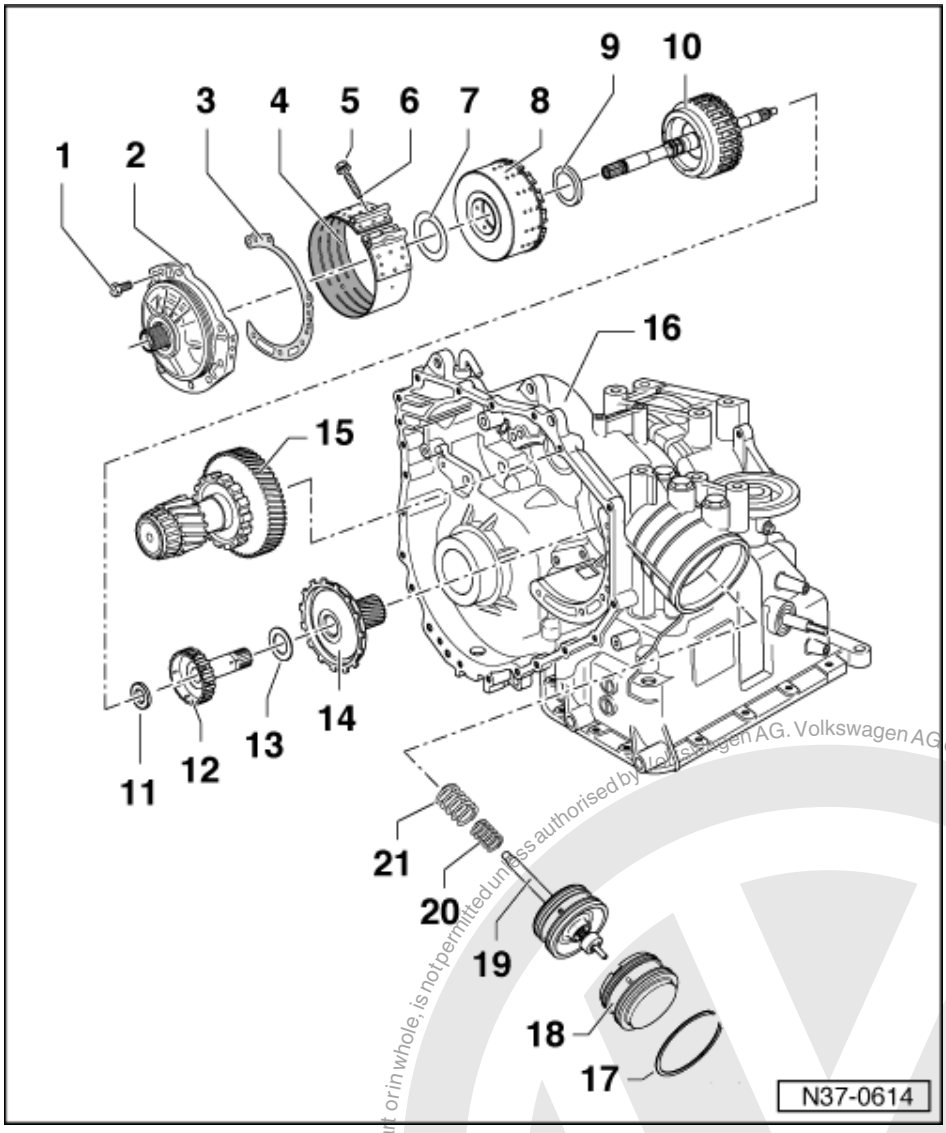

5 Nut, 45 Nm
6 Adjustment screw
- For brake band -B2-
- Always renew
- Adjusting the brake band => Page 131

7 Shim
- Determining thickness => Adjusting clutch play between -K2- and ATF pump, Page 132

8 Reverse gear clutch -K2-
- Dismantling and assembling =>Page 147

9 Axial needle bearing
- Observe installation position =>Page 96

Protected by copyright. Copying for private or commercial purposes, in part or in whole, is not permitted unless authorised by Volkswagen AG. Volkswagen AG does not guarantee or accept any liability with respect to the correctness of information in this document. Copyright by Volkswagen AG.
satelettronica

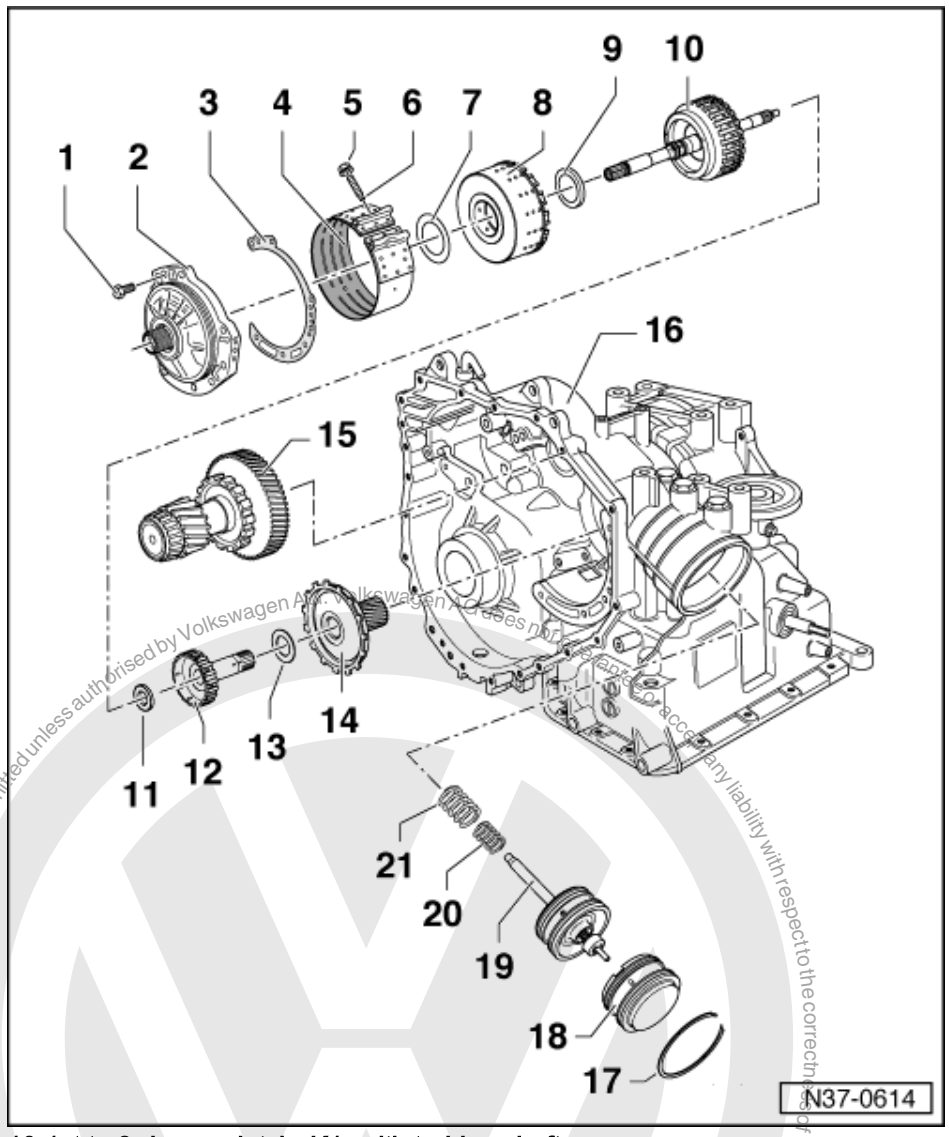

10 1st to 3rd gear clutch -K1- with turbine shaft
- Dismantling and assembling => Page 143

11 Axial needle bearing
- Observe installation position => Page 96

12 Input shaft

13 Axial needle bearing with washer
- Observe installation position => Page 96

14 Large sun gear

15 Drive pinion
- Dismantling and assembling => Page 192
- Spare part is allocated according to gearbox code letters

satelettronica

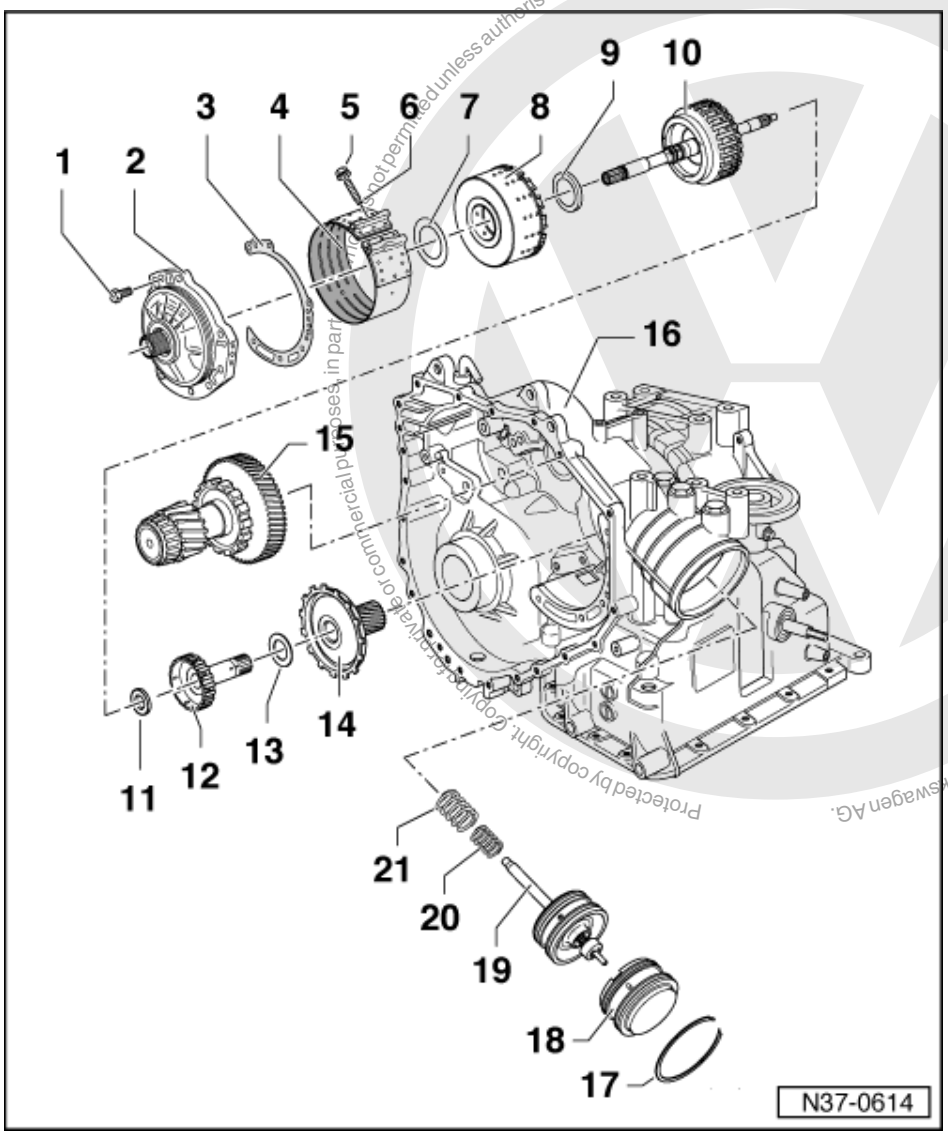

16 Gearbox housing
17 Circlip
18 Cover
- With operating piston for 4th gear

19 Operating piston for 2nd and 4th gear brake
- For brake band -B2-
- Spare part is allocated according to gearbox code letters

20 Spring
21 Spring

Protected by copyright. Copyright by Volkswagen AG. Volkswagen AG does not guarantee or accept any liability with respect to the correctness of information in this document. Copyright by Volkswagen AG.
satelettronica

6.5 - II - Removing and installing gearbox housing cover up to input gear

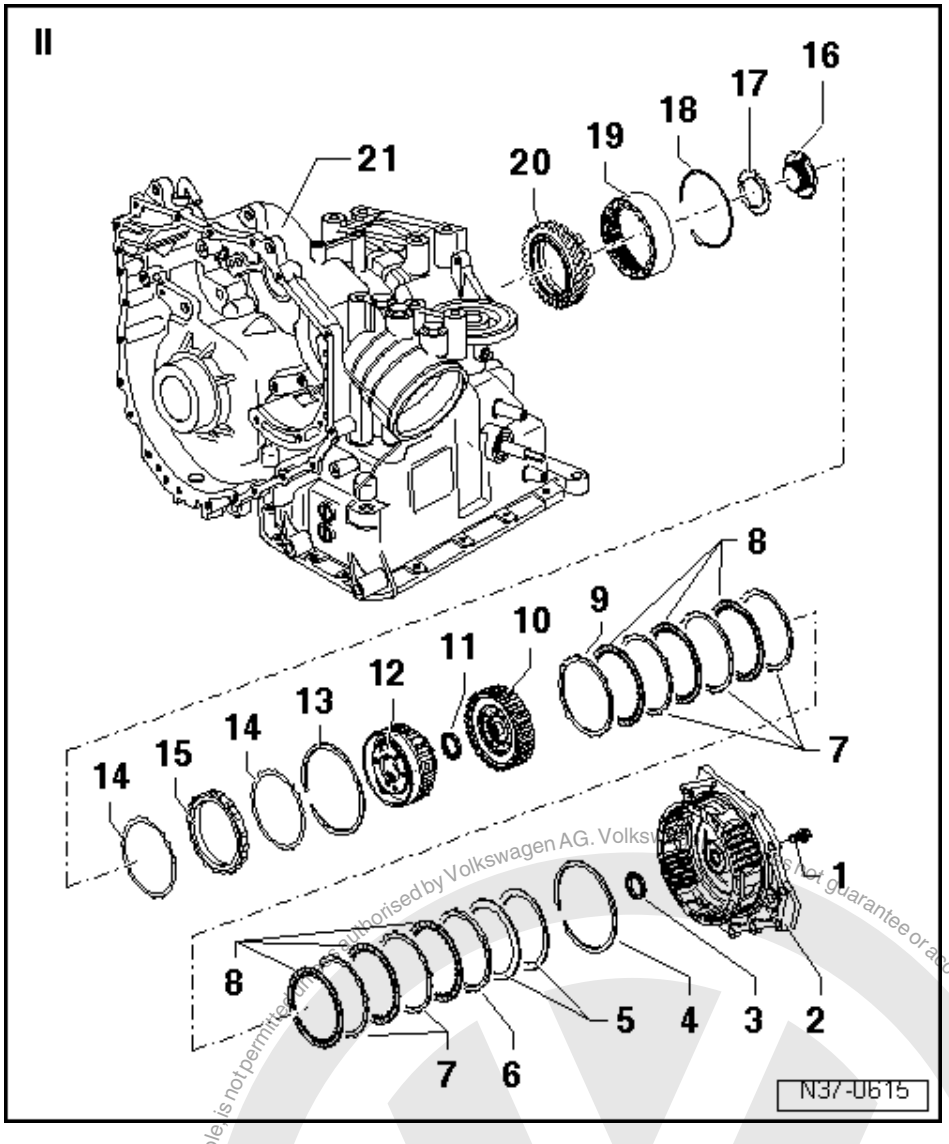

=> Overview, Page 86

Dismantling planetary gearbox => Page 96 ,

Assembling => Page 107 .

1 Bolt, 20 Nm

2 Gearbox housing cover
- With piston and spring carrier for reverse gear brake -B1-
- Dismantling and assembling => Page 139

3 Axial needle bearing
- Observe installation position => Page 96

4 Circlip

satelettronica

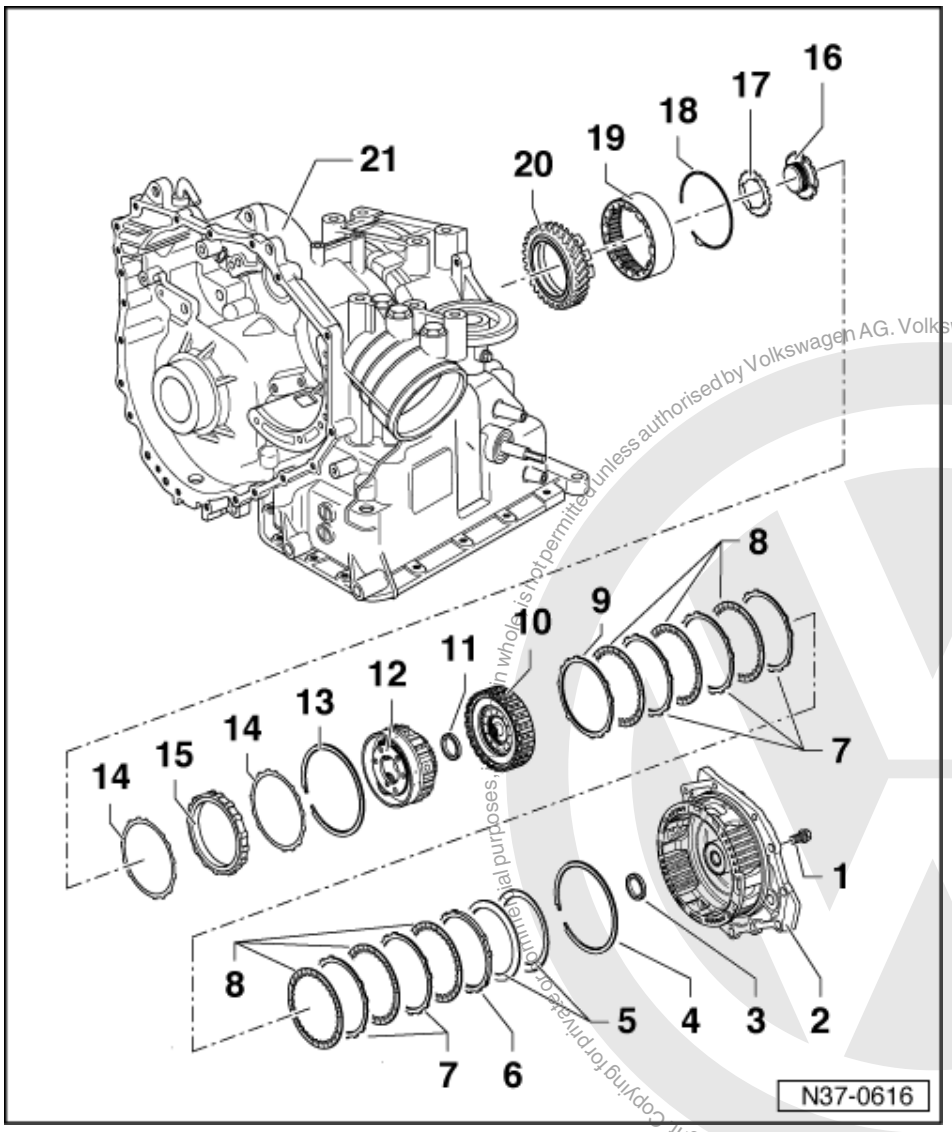

5 Dished spring
- Observe installation position: Larger diameter faces each other

6 Pressure plate -B1-

7 Outer plate, -B1-
- Quantity of outer plates -B1- =>from Page 3

8 Inner plate, -B1-
- Quantity of inner plates -B1- =>from Page 3
- Before installing place plates in ATF for 15 minutes

9 Pressure plate -B1-

10 3rd and 4th gear clutch -K3-
- Dismantling and assembling => Page 151

Protected by copyright. Copying for private or commercial purposes, in whole is not permitted unless authorised by Volkswagen AG. Volkswagen AG does not guarantee or accept any liability with respect to the correctness of information in this document. Copyright by Volkswagen AG.
satelettronica

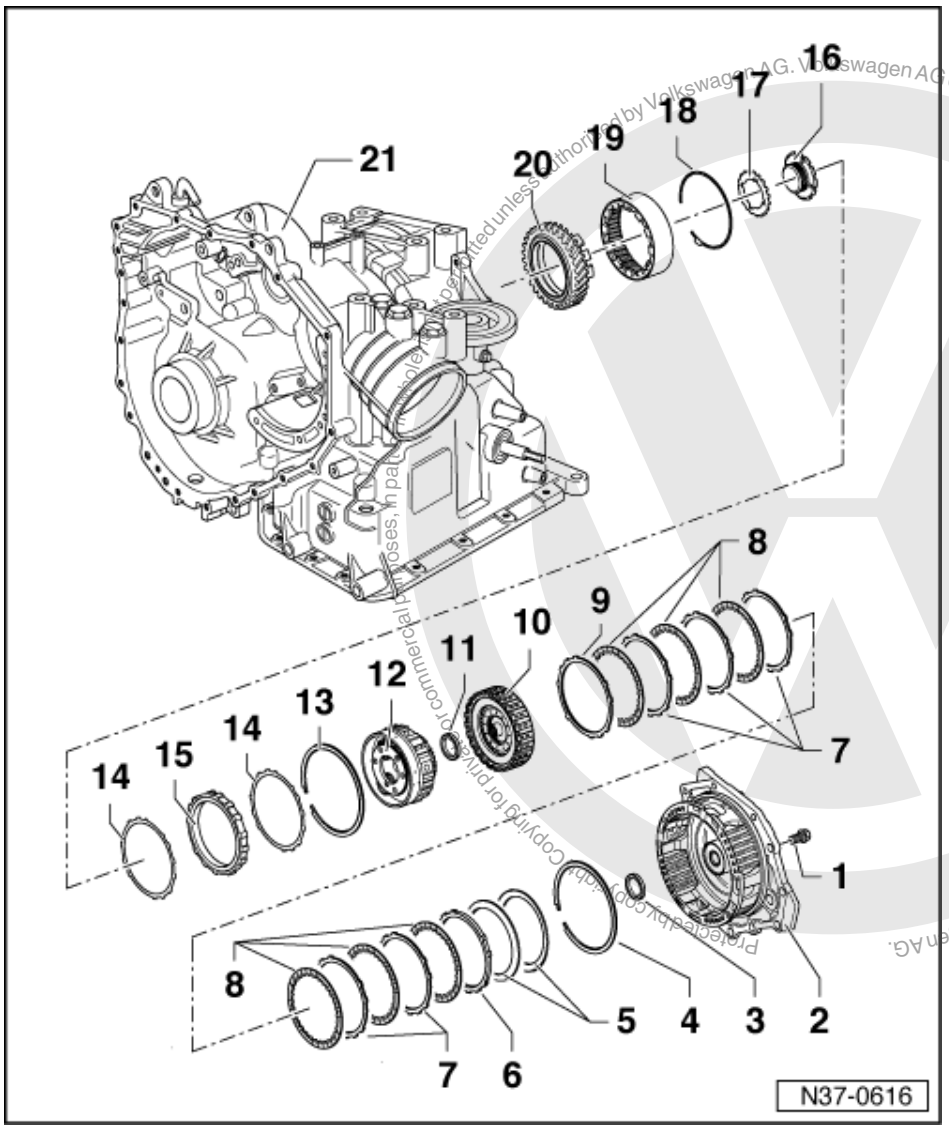

11 Axial needle bearing
- Observe installation position => Page 96

12 Planet carrier
- When replacing, turn to left in the free- wheel

13 Circlip
- For freewheel

14 Thrust washer
- For free-wheel -item 15 -

15 Free-wheel
- Dismantling and assembling => Page 141

16 Clamping bolt, 60 Nm
- Secures input shaft

satelettronica

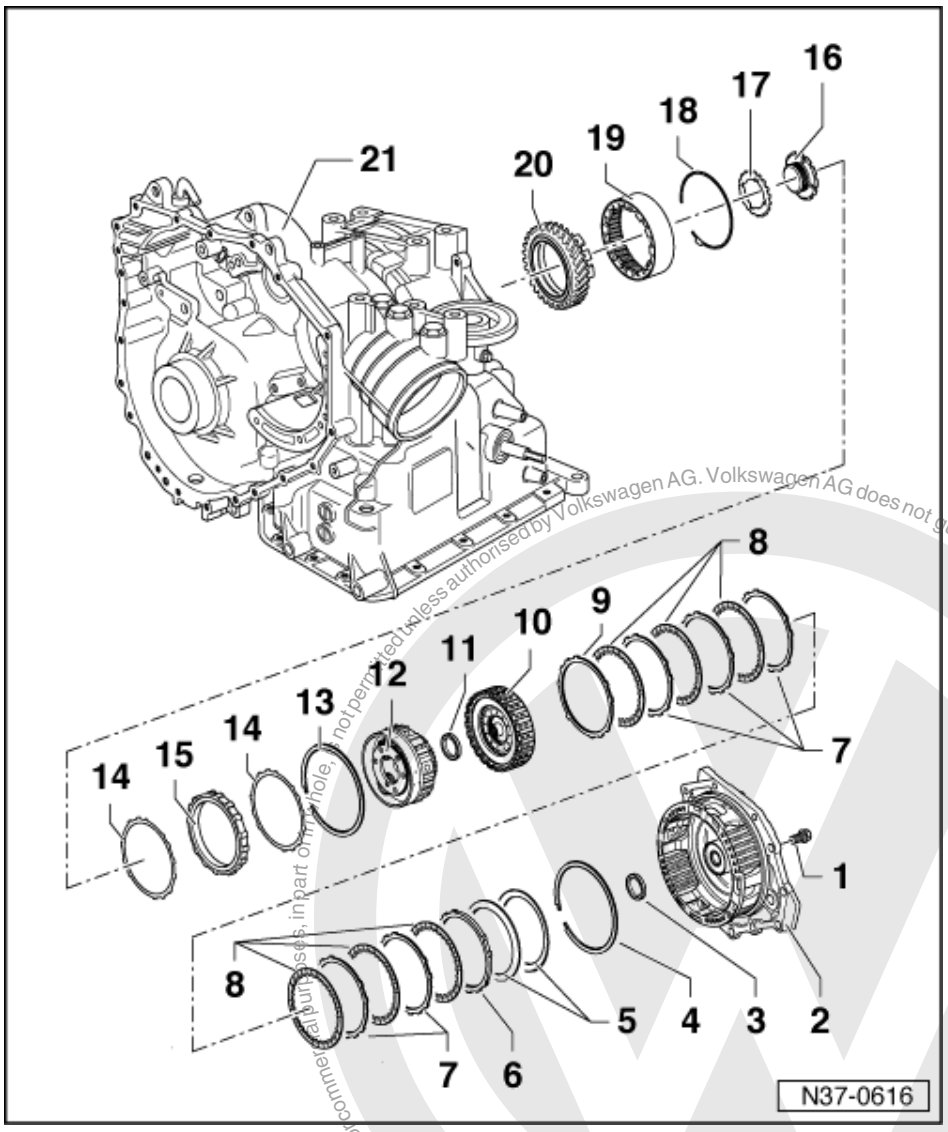

17 Locking plate
- For clamping bolt
- Always renew
- Insert the 4 lugs on the locking plate into the drillings in the gearbox housing

18 Circlip
- For annulus
- Lug on circlip locates in a tooth gap on input gear
- For gearboxes from 07.99 => fig. 1

19 Annulus
- For gearboxes from 07.99 => fig. 1

20 Input gear
- With ball bearing
- Ball bearing cannot be dismantled from the input gear
- For gearboxes from 07.99 => fig. 1

21 Gearbox housing

Protected by copyright. Copying for private or commercial purposes, in part or in whole, is not permitted unless authorised by Volkswagen AG. Volkswagen AG does not guarantee or accept any liability with respect to the correctness of information in this document. Copyright by Volkswagen AG.
satelettronica

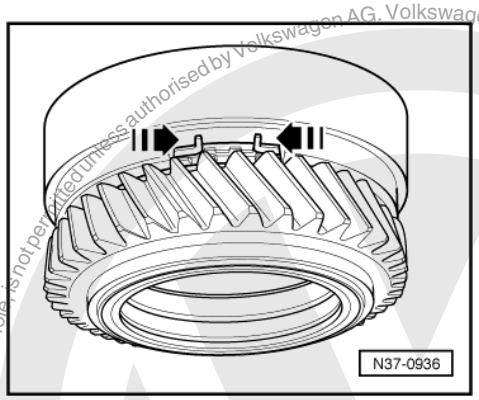

-> Fig.1 Annulus and output gear from 07.99

- To dismantle, compress circlip.

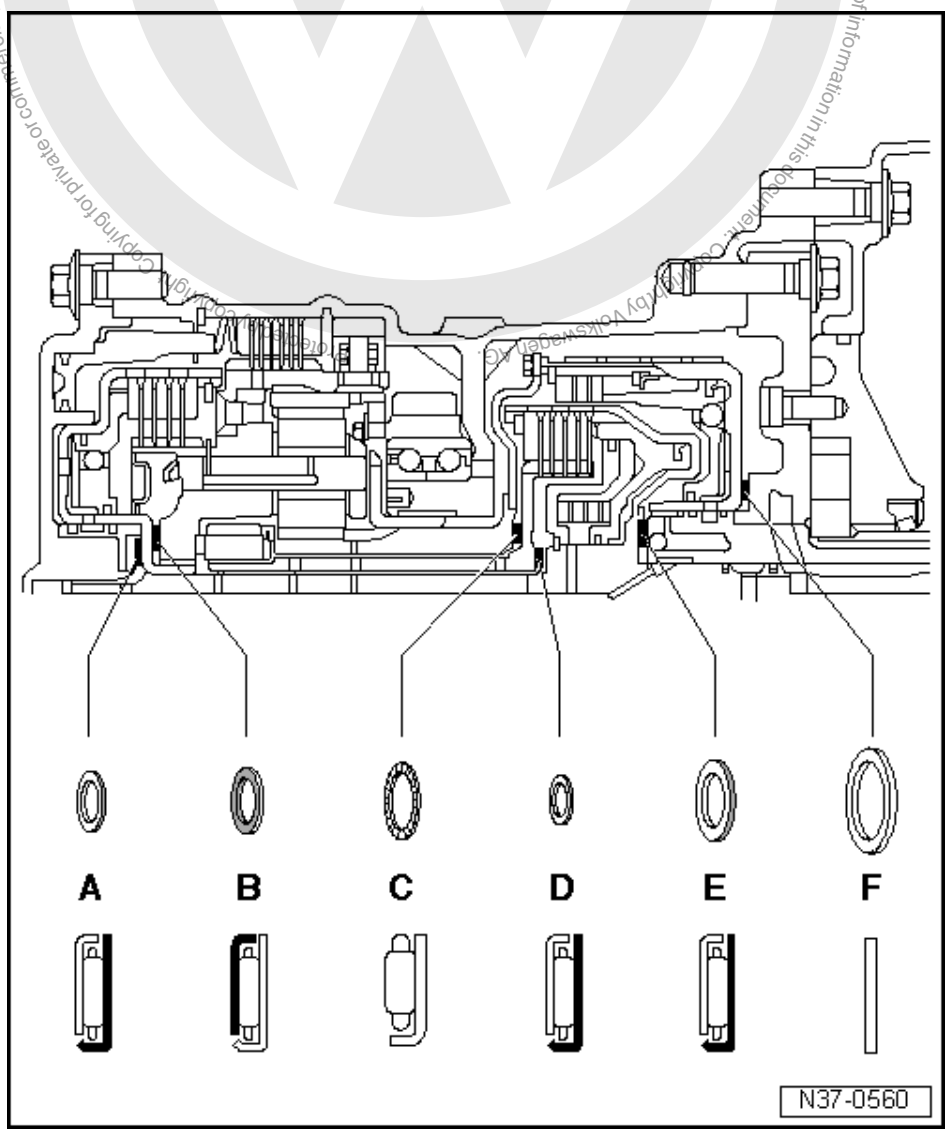

Position of the shim -F- and the axial needle roller bearings in planetary gearbox

Copyright by Volkswagen AG. Volkswagen AG does not guarantee or accept any liability with respect to the correctness of information in this document. Copying for private or commercial purposes, in part or in whole, is not permitted unless authorised by Volkswagen AG.

satelettronica

Dimensions on the shim and the axial needle roller bearing

Bearing	Inner ø mm	Outer ø mm
A	22.10	40.00
B	30.00	45.00
C	29.00	48.00
D	18.35	34.50
E	32 to 34	49.50
F	53.30	70.00

6.6 - Dismantling and assembling planetary gearbox

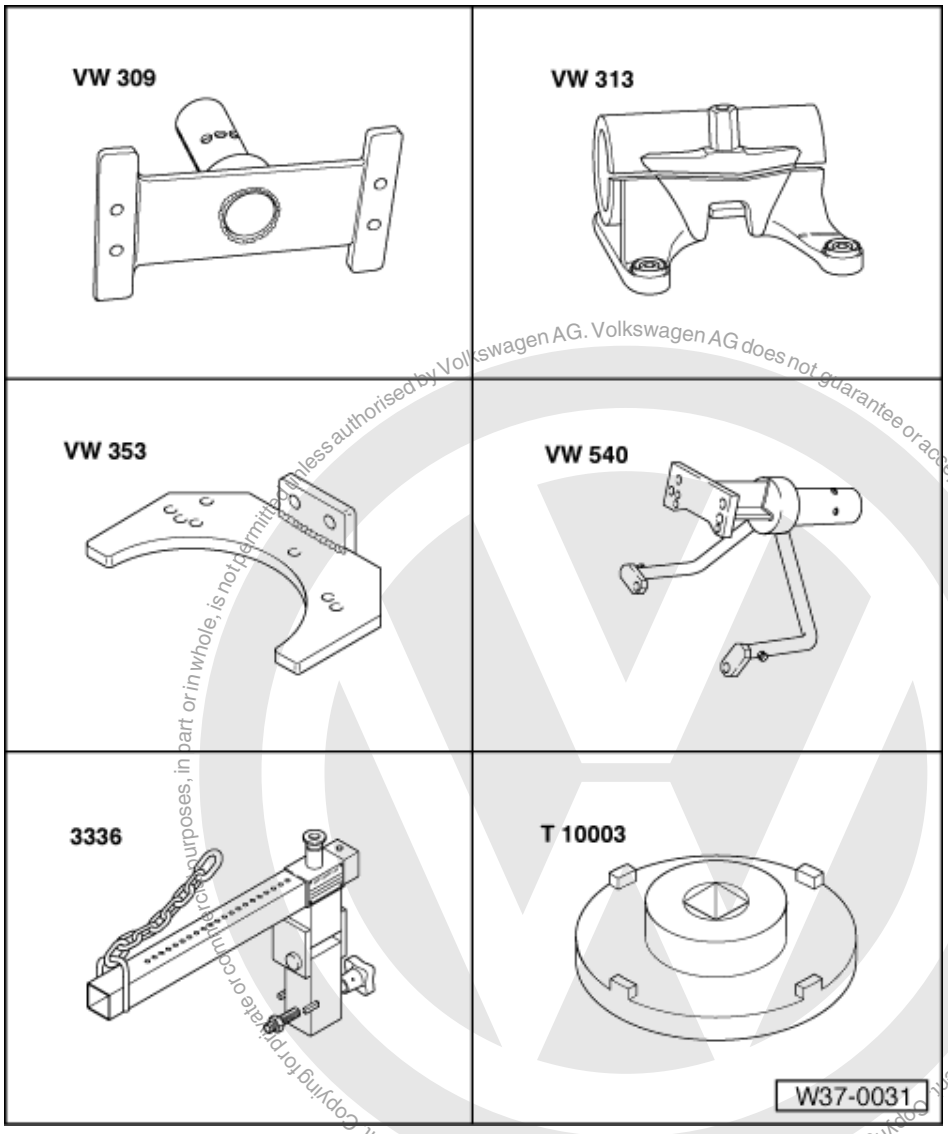

Protected by copyright. Copying for private or commercial purposes, in part or in whole, is not permitted unless authorised by Volkswagen AG. Volkswagen AG does not guarantee or accept any liability with respect to the correctness of information in this document. Copyright by Volkswagen AG.

satelettronica

Special tools and workshop equipment required

- VW 309 Holding plate
- VW 313 Support clamp
- VW 353 Gearbox support
- VW 540 Engine and gearbox support

- 3336 Gearbox lifting beam
- T 10003 Spanner for clamping bolt

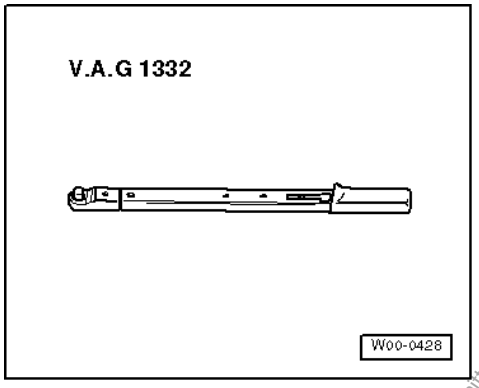

- V.A.G 1332 Torque wrench

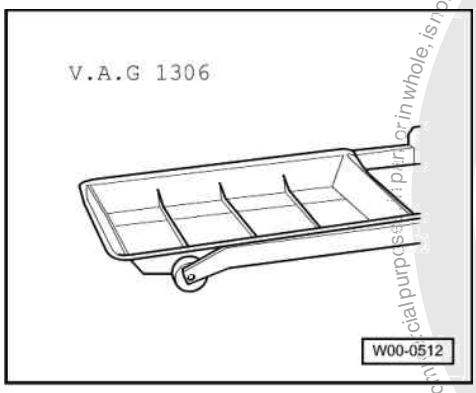

- V.A.G 1306 Drip tray
- 3 bolts M8 x 35
- Sealant D176 404 A2

Dismantling planetary gearbox

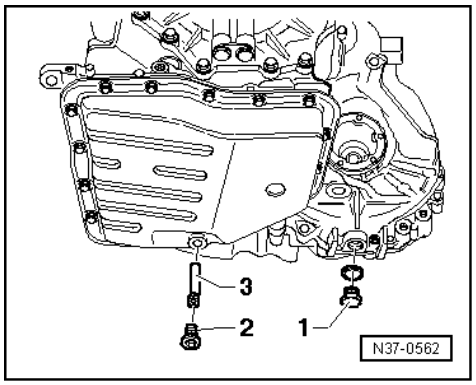

- Gearbox suspended on lifting beam 3336

- Place container under the gearbox.
- -> Remove plug -1-.
- Remove plug -2- and ATF overflow pipe -3-.
- Drain ATF.

Protected by copyright. Copying for private or commercial purposes, in part or in whole, is not permitted unless authorised by Volkswagen AG. Volkswagen AG does not guarantee or accept any liability with respect to the correctness of information in this document. Copyright by Volkswagen AG.
satelettronica

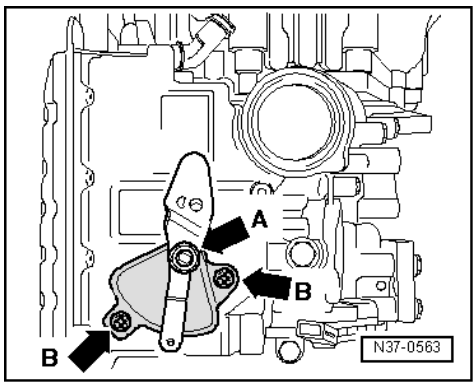

- Take out torque converter.
- -> Unscrew nut -arrow A- for lever/selector shaft.
- Remove screws -arrow B- for multi-function switch from gearbox.
- Remove electrical connections and sender from gearbox => from page 24 .

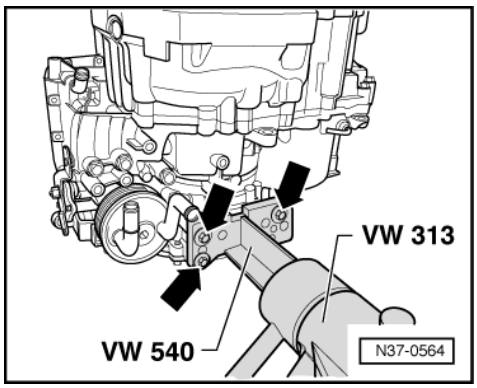

- -> Secure gearbox to engine/gearbox support VW 540 -arrows- and fit into support clamp VW 313.
- Remove lifting beam 3336.

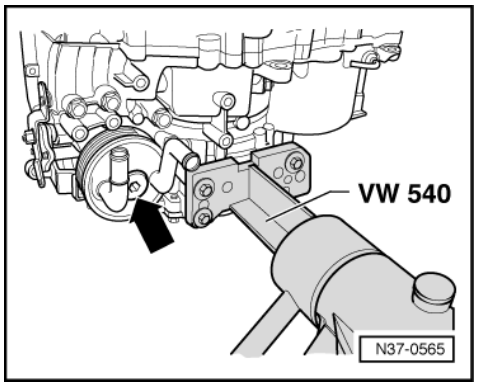

- -> Remove ATF cooler from gearbox -arrow-.

Protected by copyright. Copying for private or commercial purposes, in part or in whole, is not permitted unless authorised by Volkswagen AG. Volkswagen AG does not guarantee or accept any liability with respect to the correctness of information in this document. Copyright by Volkswagen AG.
satelettronica

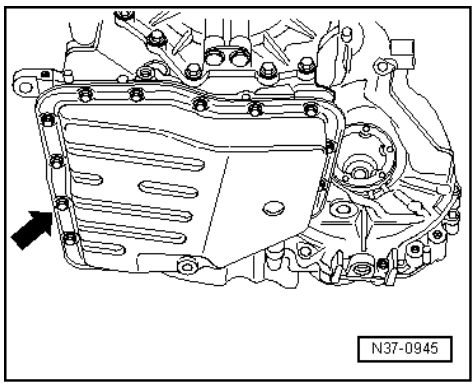

- -> Remove sump.

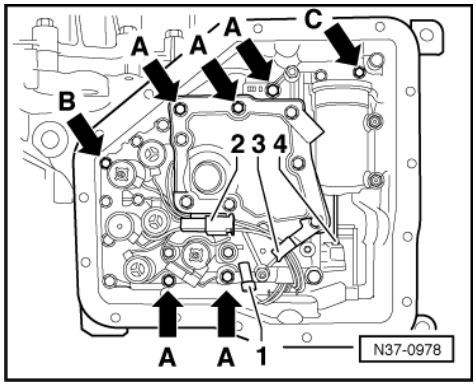

Gearbox up to manufacture date 06.99

- -> Remove ATF temperature sender -A-.
- Separate solenoid valve connector by pressing the tabs -1- and pulling off -2-.

The cable colours are the same as the relevant solenoid valve colours.

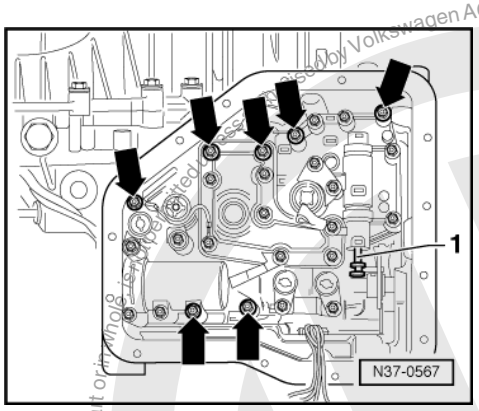

- -> Remove only the bolts marked by the arrows to remove the valve chest.

When removing the valve chest the manual selector valve -1- remains in valve chest.

- Secure manual selector valve so that it cannot fall out.

satelettronica
Protected by copyright. Copying for private or commercial purposes, in part or in whole, is not permitted unless authorised by Volkswagen AG. Volkswagen AG does not guarantee or accept any liability with respect to the correctness of information in this document. Copyright by Volkswagen AG.

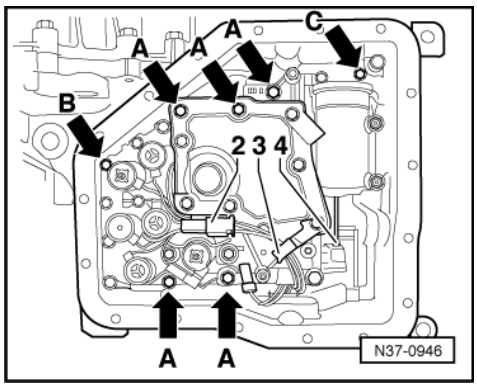

Gearbox from manufacture date 07.99

- -> Remove ATF temperature sender -1-.
- Separate connection -2-.
- Remove wiring from holder -3-.
- Remove only the bolts marked with arrows A,B,C to remove the valve chest (different lengths).

When removing the valve chest, the manual selector valve -4- remains in the valve chest.

- Secure manual selector valve so that it cannot fall out.

Continued for all gearboxes

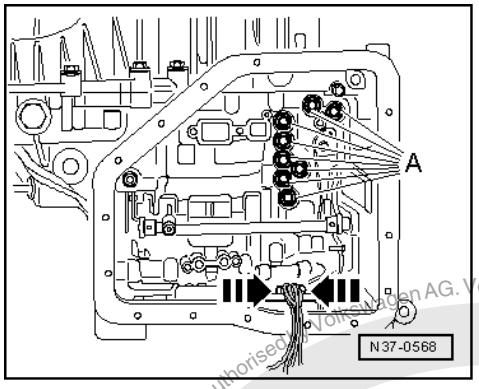

- -> Remove O-rings -A-.
- Unclip wire -arrows- and remove the solenoid valve wiring harness.

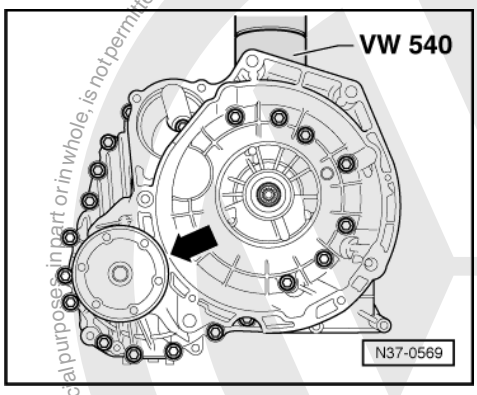

- -> Remove left and right flange shafts -arrow-.
- Remove securing bolts (Qty. 20) for the torque converter housing.
- Take off torque converter housing.

satelettronica
Protected by copyright. Copying for private or commercial purposes, in part or in whole, is not permitted unless authorised by Volkswagen AG. Volkswagen AG does not guarantee or accept any liability with respect to the correctness of information in this document. Copyright by Volkswagen AG.

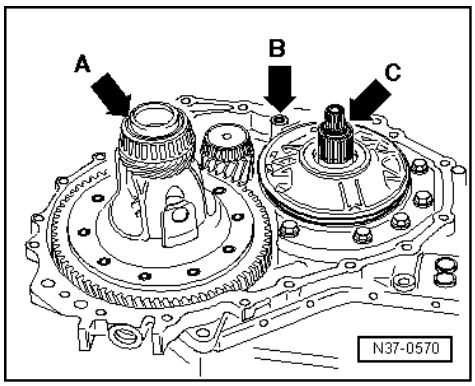

- -> Take differential -arrow A- off gearbox housing.
- Remove O-ring -arrow B- from gearbox housing.
- Remove O-ring -arrow C- form turbine shaft.

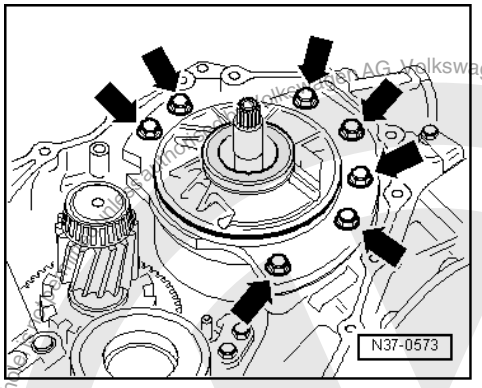

-> Remove ATF pump bolts (arrows).

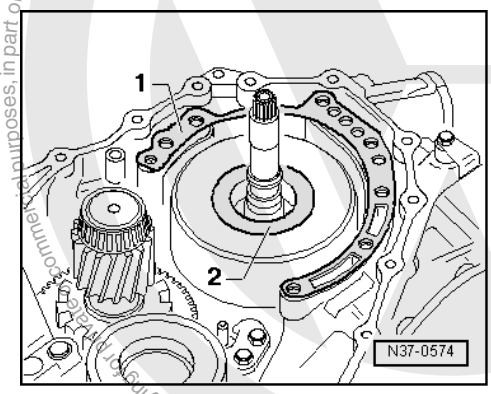

- -> Remove gasket -1- for ATF pump from flange/gearbox housing.
- Remove shim -2- from reverse gear clutch -K2-.

Protected by copyright. Copyright by Volkswagen AG. Volkswagen AG does not guarantee or accept any liability with respect to the correctness of information in this document. Copyright by Volkswagen AG. Protected by copyright. Copying for private or commercial purposes, in part or in whole, is not permitted unless authorized by Volkswagen AG.
satelettronica

Protected by copyright. Copying for private or commercial purposes, in whole or in part, is not permitted unless authorised by Volkswagen AG. Volkswagen AG does not guarantee or accept any liability with respect to the correctness of information in this document. Copyright by Volkswagen AG.

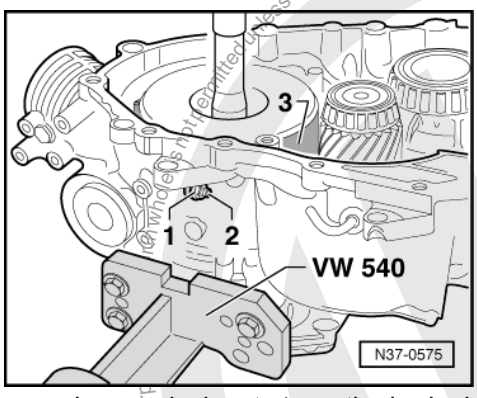

- -> Loosen lock nut -1- on the brake band adjustment screw -2-.
- Unscrew adjustment screw.
- Remove brake band.

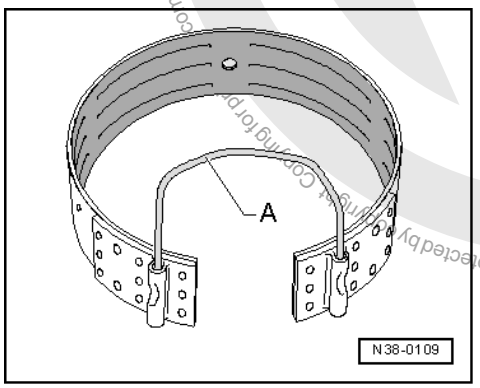

- -> After removing brake band, secure against opening out with e.g. a locally manufactured wire hoop -A-.

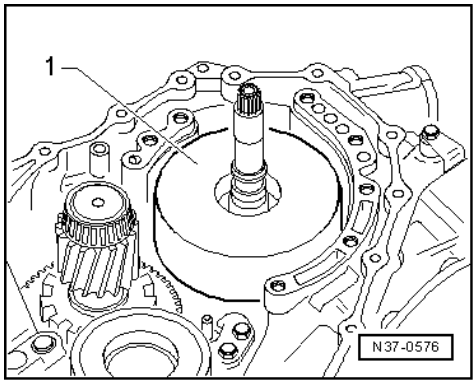

- -> Remove reverse gear clutch -1-.

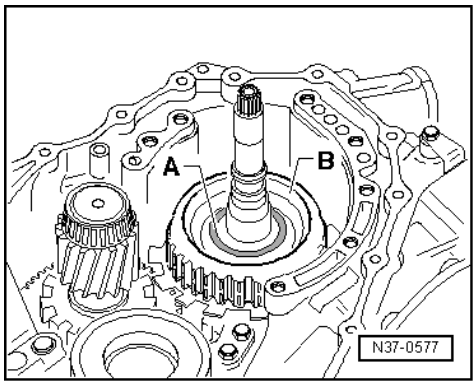

satelettronica

- -> Remove 1st to 3rd gear clutch -B- with axial needle bearing -A-.

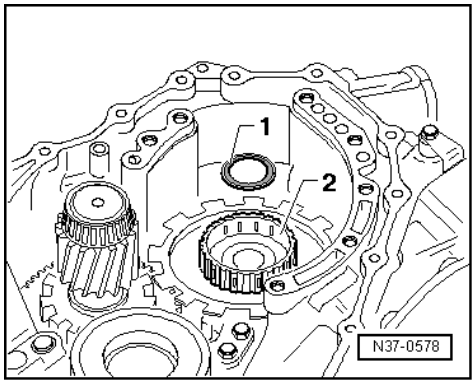

- -> Remove axial needle bearing -1- from input shaft -2-.
- Pull out input shaft.

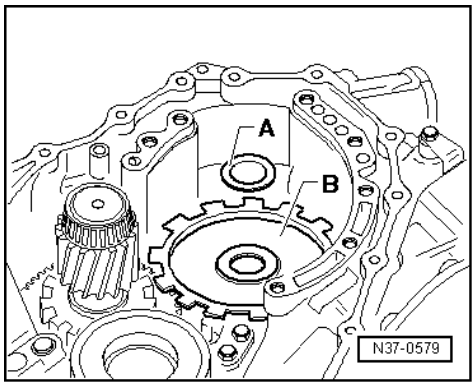

- -> Remove needle bearing -A- with large sun wheel -B-.

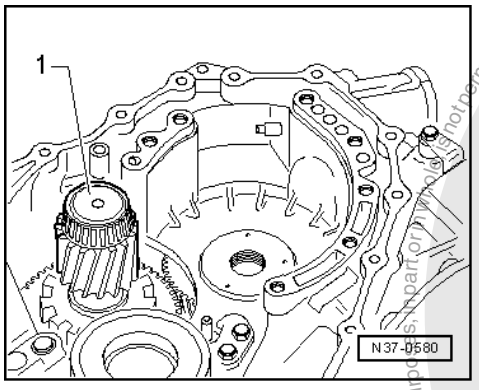

- -> Remove pinion -1- from gearbox housing.

Protected by copyright. Copying for private or commercial purposes, in part or in whole, is not permitted unless authorised by Volkswagen AG. Volkswagen AG does not guarantee or accept any liability with respect to the correctness of information in this document. Copyright by Volkswagen AG.
satelettronica

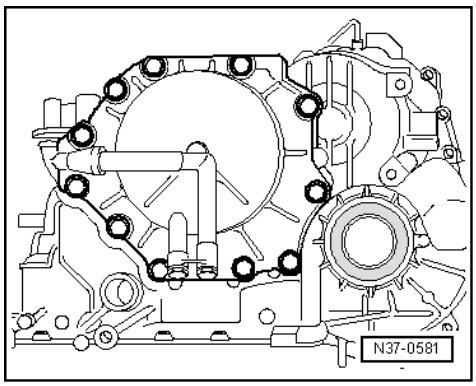

- Turn gearbox by 180°in support clamp VW 313.
- -> Loosen bolts for cover diagonally and in stages.
- Remove gearbox housing cover.

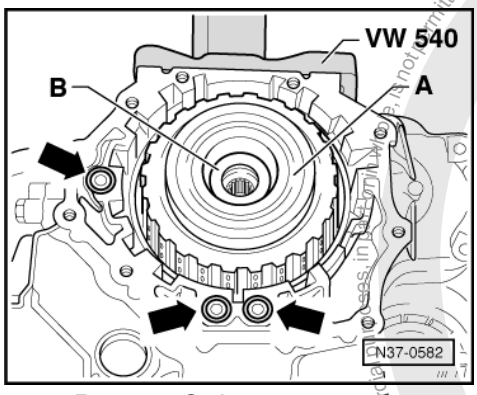

- -> Remove O-rings -arrows- from gearbox housing.
- Remove 3rd and 4th gear clutch -A- with needle bearing -B-.

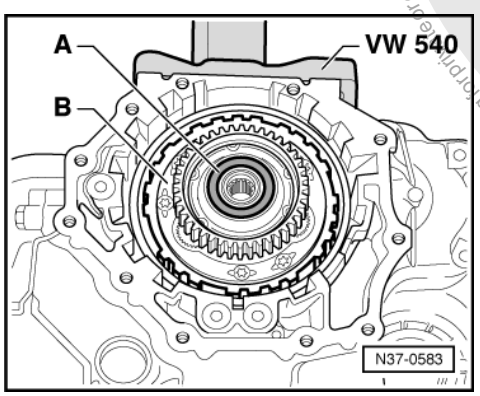

- -> Remove needle bearing -A- from planet carrier -B-.
- Pull out planet carrier.

Protected by copyright. Copying for private or commercial purposes, in part or in whole, is not permitted unless authorised by Volkswagen AG. Volkswagen AG does not guarantee or accept any liability with respect to the correctness of information in this document. Copyright by Volkswagen AG.
satelettronica

Gearbox up to manufacture date 06.99

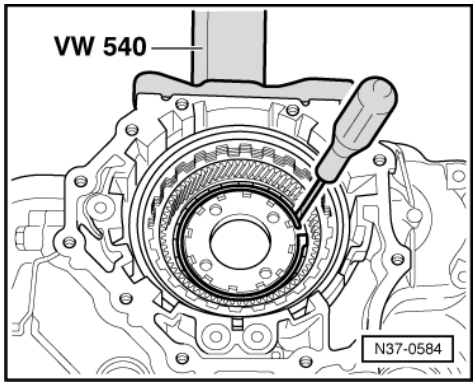

- -> Remove circlip for annulus.
- Take annulus off input gear.

Continued for all gearboxes

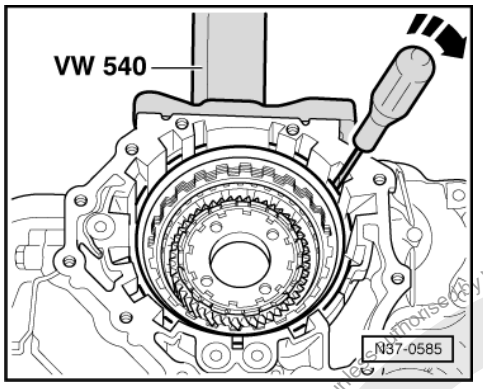

- -> Remove circlip for reverse gear brake -B1- using a screwdriver.
- Remove thrust washers, pressure plate, inner and outer plates from the reverse gear brake -B1-.

Gearbox up to manufacture date 06.99

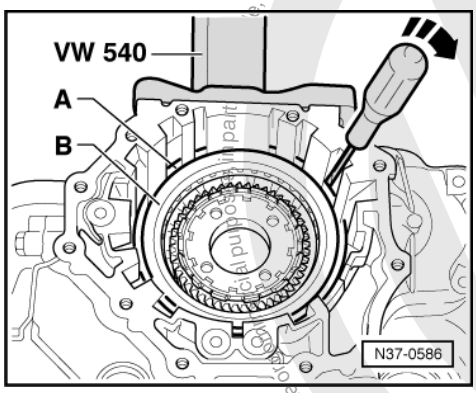

- -> Remove circlip -A- for free-wheel -B- using a screwdriver.
- Pull free-wheel out of gearbox housing together with thrust washers.

satelettronica
Protected by copyright. Copyright by Volkswagen AG.

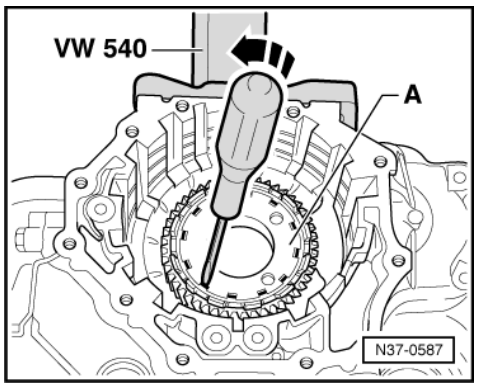

- -> Bend down the tab of the locking plate for the clamping bolt -A- with a screwdriver.

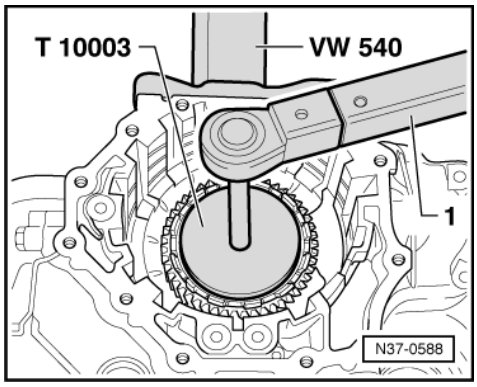

- -> Unscrew clamping bolt from gearbox housing.

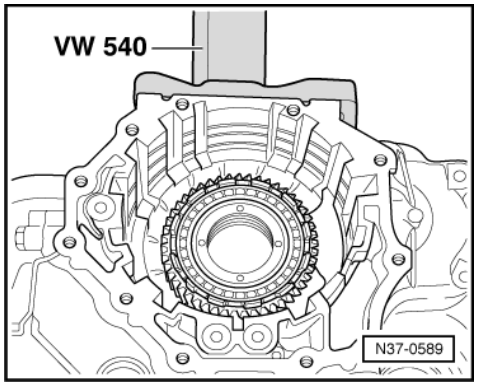

- -> Take the input gear out of the gearbox housing.

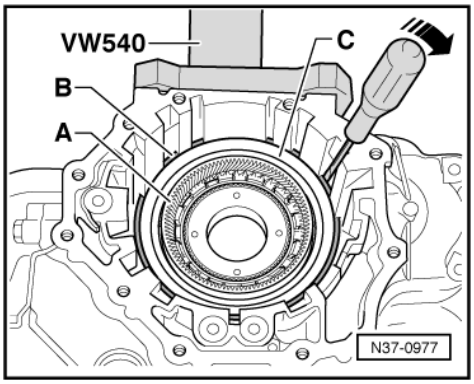

Protected by copyright. Copying for private or commercial purposes, in part or in whole, is not permitted unless authorised by Volkswagen AG. Volkswagen AG does not guarantee or accept any liability with respect to the correctness of information in this document. Copyright by Volkswagen AG.
satelettronica

Gearbox from manufacture date 07.99

- -> Bend down the tab of the locking plate for the clamping bolt -A- with a screwdriver.

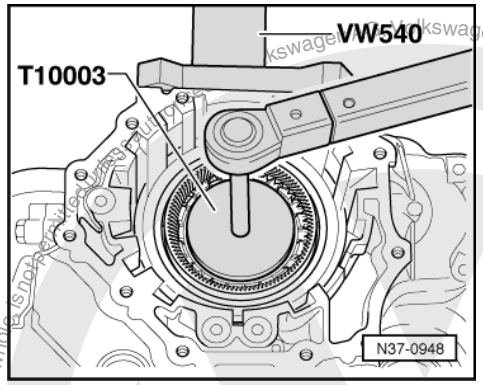

- -> Unscrew clamping bolt from gearbox housing.

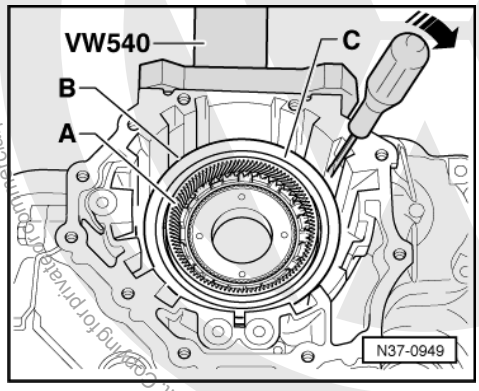

- -> Remove input gear -A- from gearbox housing.
- Remove circlip -B- for free-wheel -C- using a screwdriver.
- Pull free-wheel out of gearbox housing together with thrust washers.
- Remove input gear from annulus => page 95 .

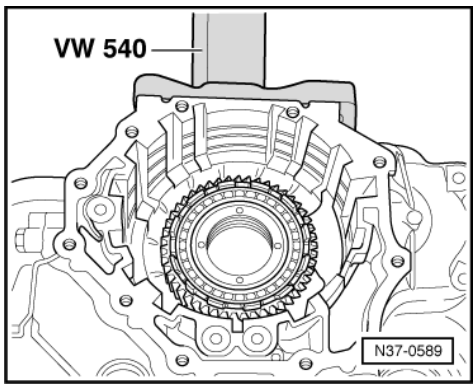

Assembling planetary gearbox up to manufacture date 06.99

Assembling planetary gearbox up to manufacture date 07.99 => page 115 .

Insert axial needle bearing in its fitted position =>Page 96

- -> Insert input gear into the gearbox housing.

Volkswagen AG does not guarantee or accept any liability with respect to the correctness of information in this document. Copyright by Volkswagen AG.
Copying for private or commercial purposes, in part or in whole, is not permitted unless authorized by Volkswagen AG.
satelettronica

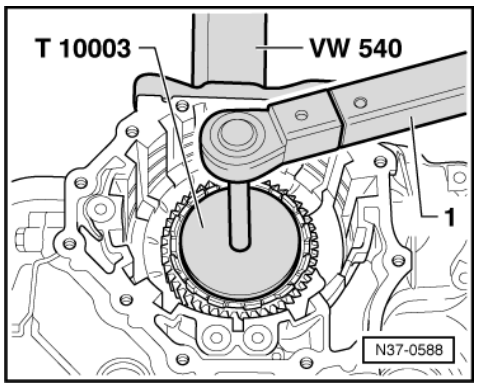

- Insert new locking plate with the lugs in the recesses in the gearbox housing.
- -> Tighten clamping bolt to prescribed torque => page 93 .

1 - V.A.G 1332

- Lock clamping bolt with locking plate.
- Install free-wheel complete with thrust washers.
- Ensure correct fitting position when inserting the free-wheel =>Page 141
- Secure free-wheel in position with circlip.

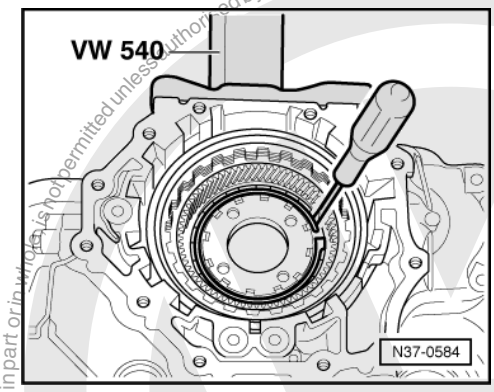

- -> Fit annulus onto input gear.
- Fit circlip for annulus on input gear with a screwdriver.

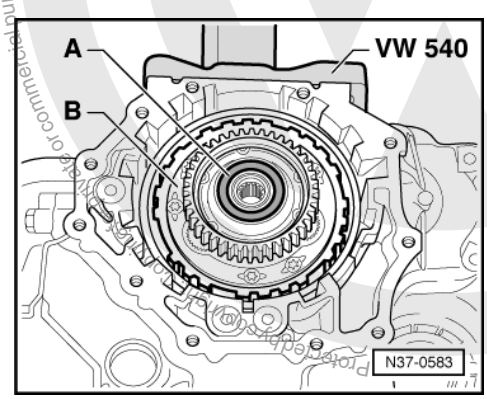

- -> Place axial needle bearing -A- in correct fitted position (blackened surface remains visible) on the planet carrier -B-.
- Insert planet carrier simultaneously in the annulus and free-wheel. When inserting into the free-wheel the planet carrier will turn anti-clockwise.
- Functional check of freewheel:

It should only be possible to turn the planet carrier anti-clockwise (free- wheel open).

Protected by copyright. Copying for private or commercial purposes, in part or in whole, is not permitted unless authorised by Volkswagen AG. Volkswagen AG does not guarantee or accept any liability with respect to the correctness of information in this document. Copyright by Volkswagen AG.
satelettronica

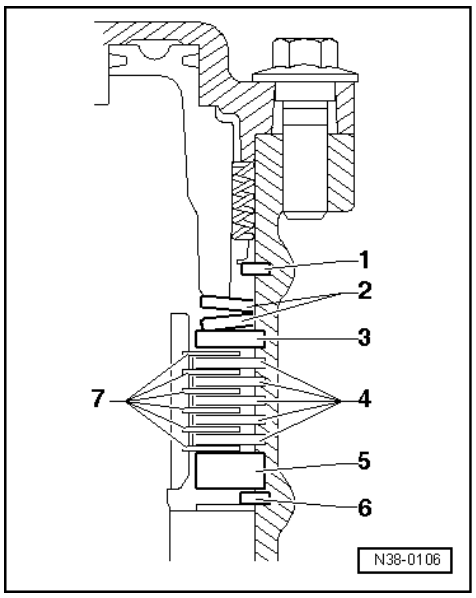

- -> Install -B1- plates as follows:
  - First place a pressure plate -5- (always 4.4mm thick) onto the circlip -6-.
  - Insert the -B1- inner plates -7- and outer plates -4-.
  - Place on the thrust plate -3-.
  - Insert dished springs -2- in correct installation position (larger diameter faces one another).
  - Install circlip -1-.
- Perform measurement check of -B1-
  => Page 128

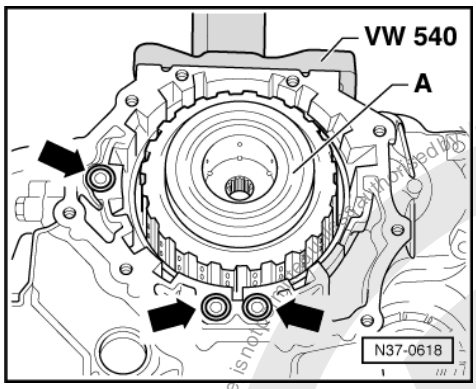

- -> Inserting 3rd and 4th gear clutch -K3-.
- Place O rings -arrows- onto the gearbox housing.

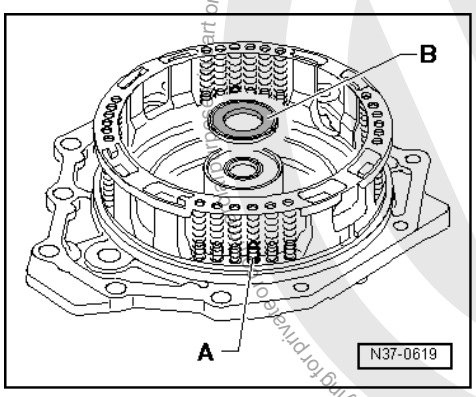

- -> Press the spring cage onto the guide pins of the -B1- piston.

There are four guide pins -A- which are thicker and hold the spring cage in place.

Protected by copyright. Copying for private or commercial purposes, in part or in whole is not permitted unless authorised by Volkswagen AG. Volkswagen AG does not guarantee or accept any liability with respect to the correctness of information in this document. Copyright by Volkswagen AG.
satelettronica

- Coat axial needle bearing -B- with ATF so that it remains in position when fitting the gearbox housing cover.

Fit axial needle bearing in correct position (blackened surface remains visible) on the cover.

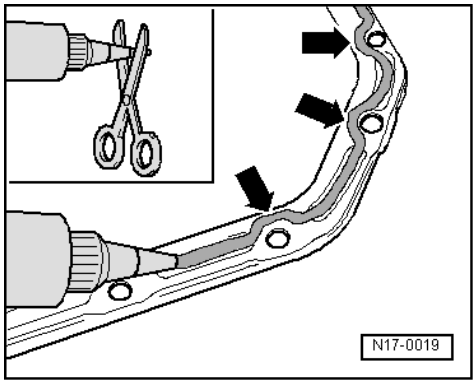

- -> Cut off tube nozzle at forward marking (nozzle approx. 3 mm ø).
- Apply sealant D 176 404 A2 onto clean sealing surface of the cover. The sealant bead must be
  - 3...4 mm thick.
- Install gearbox housing cover.

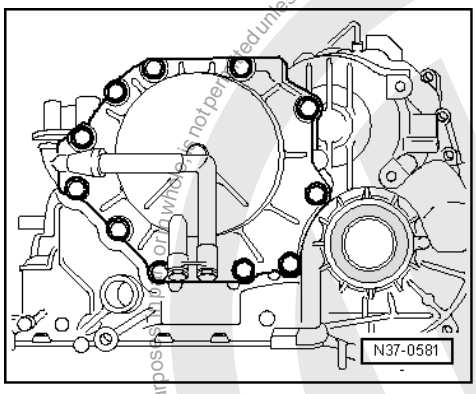

- -> Tighten bolts evenly and in diagonal sequence to prescribed torque => page 87 .
- Turn gearbox through 180°.

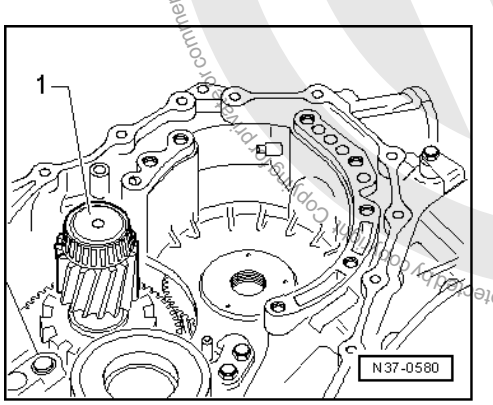

- -> Insert pinion shaft -1-.

Protected by copyright. Copyright by Volkswagen AG.
Copyright by Volkswagen AG. Volkswagen AG does not guarantee or accept any liability with respect to the correctness of information in this document.
Copyright of this document is not permitted unless authorised by Volkswagen AG.
satelettronica

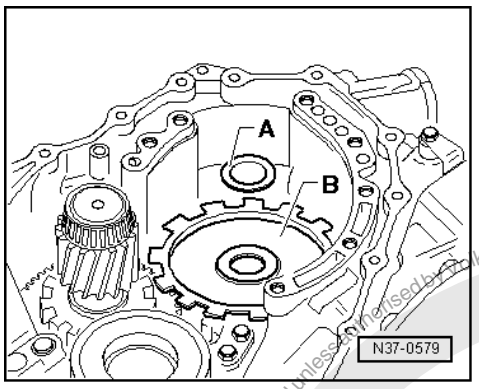

- -> Insert large sun wheel -B- in the gearbox housing.

Place roller bearing -A- in correct position (smooth surface remains visible) on the large sun wheel.

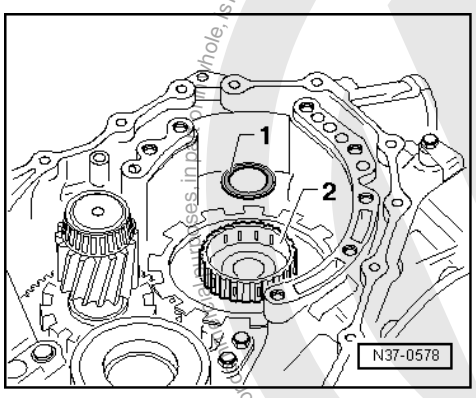

- -> Insert input shaft -2- into large sun wheel.

Place axial needle bearing -1- in correct fitted position (blackened side remains visible) onto the input shaft.

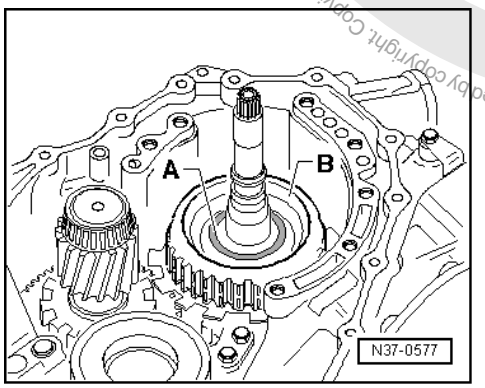

- -> Insert 1st to 3rd gear clutch -B-.

Place axial needle bearing -A- in correct fitted position (blackened surface remains visible) into the 1st to 3rd gear clutch.

If individual parts of the planetary gearbox have been replaced the axial needle bearing must be recalculated =>Adjusting clutch clearance, from page 132 .

Protected by copyright. Copyright by Volkswagen AG.
Copyright by Volkswagen AG. Volkswagen AG does not guarantee or accept any liability with respect to the correctness of information in this document.
satelettronica

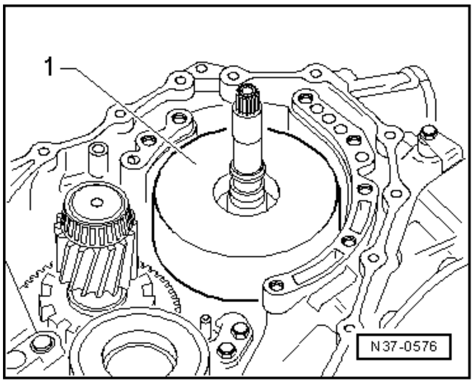

- -> Insert reverse gear clutch -1-.

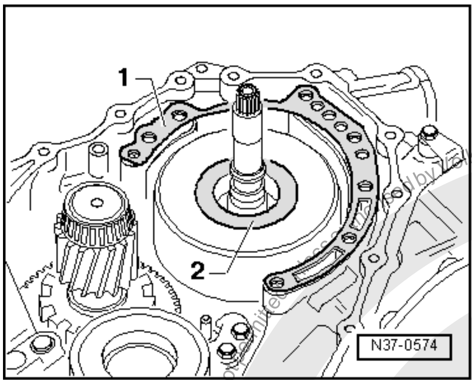

- -> Place shim -2- onto the reverse gear clutch -K1-.

If individual parts of the planetary gearbox have been replaced the size of the shim must be recalculated =>Adjusting clutch clearance, from page 132 .

- Fit gasket -1- for ATF pump.

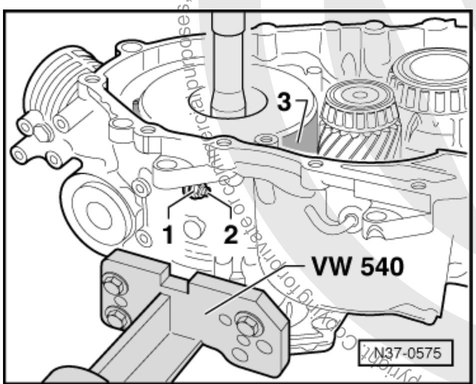

- -> Install brake band as follows:
  - Fit new adjustment screw -2- with lock nut -1- in gearbox.

  Do not screw in as far as the coating part of the thread. The final tightening of the adjustment screw is not carried out until the ATF pump has been installed =>adjusting the brake band, Page 131 .
  - Install brake band -3-.

- Align ATF pump to gearbox housing. When inserting, take care with shim, gasket for ATF pump and ATF pump piston rings.

Protected by copyright. Copying for private or commercial purposes, in part or in whole, is not permitted unless authorised by Volkswagen AG. Volkswagen AG does not guarantee or accept any liability with respect to the correctness of information in this document. Copyright by Volkswagen AG.
sateletronica

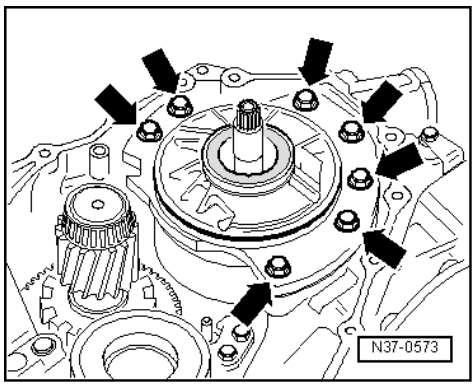

- -> Tighten ATF pump bolts -arrows- to prescribed torque => page 91 .

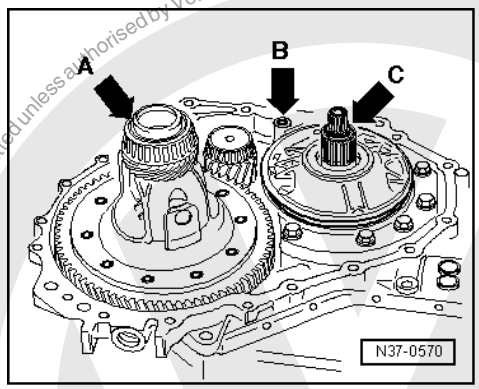

- -> Install differential -arrow A-.
- Place new O rings -arrow B- on gearbox housing and in turbine shaft -arrow C-.
- Apply sealant D 176 404 A2 to the clean sealing surface of the torque converter housing. The sealant bead must be
  - 3...4 mm thick
- Place torque converter housing on the gearbox housing; when doing this take care with dowel and ATF pump O ring.

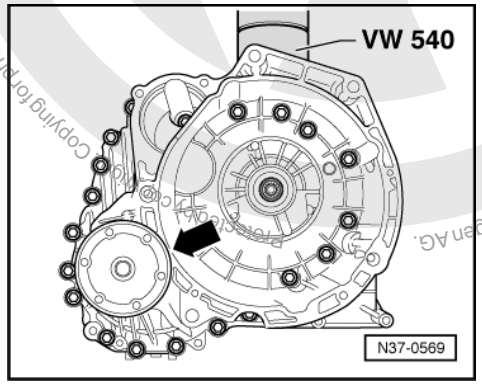

- -> Tighten bolts for torque converter housing to 30 Nm.
- Install left and right-hand flanged shafts -arrow- and tighten bolts to prescribed torque => from page 180 .
- Install plug with wiring harness for the solenoid valves.

Copying for private or commercial purposes, in part or in whole, is not permitted unless authorised by Volkswagen AG. VW AG does not guarantee or accept any liability with respect to the correctness of information in this document. Copyright by Volkswagen AG.
satelettronica

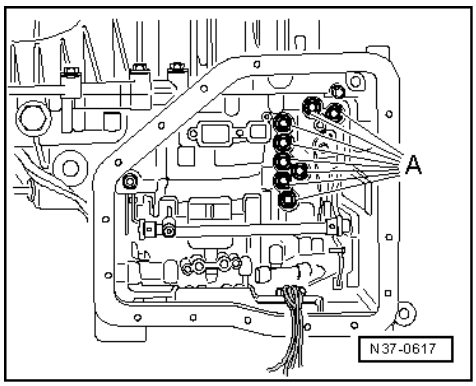

- -> Insert new O rings -A- in the gearbox housing.

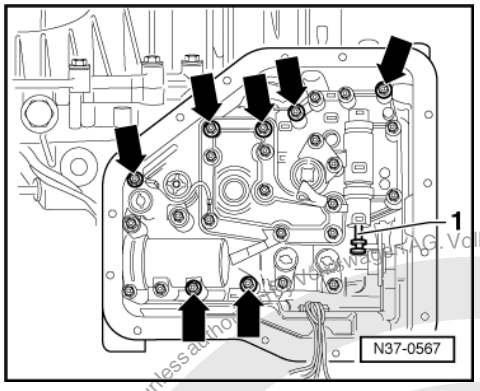

- -> Fit valve chest so that the pin of the detent plate engages in the groove of the selector spool valve -1-.
- Tighten bolts -arrows- to prescribed torque => page 166 .

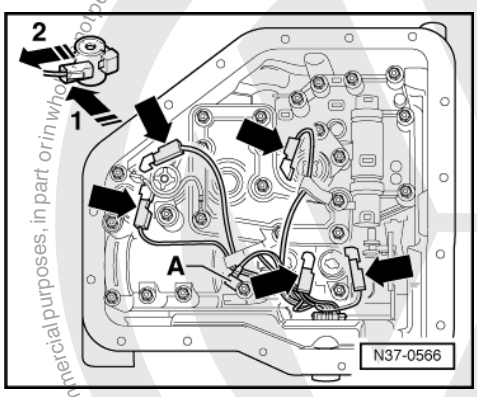

- -> Install ATF temperature sender -A-.
- Attach connectors -arrows- for the solenoid valves.

The cable colours are the same as the relevant solenoid valve colours.

- Install ATF screen and tighten bolts to prescribed torque => page 168 .

Protected by copyright. Copying for private or commercial purposes, in part or in whole, is not permitted unless authorised by Volkswagen AG. Volkswagen AG does not guarantee or accept any liability with respect to the correctness of information in this document. Copyright by Volkswagen AG.
satelettronica

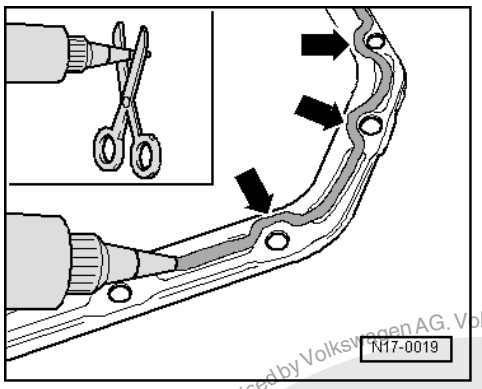

Apply sealant D176 404 A2 as follows to the oil pan:

- -> Cut off tube nozzle at forward marking (nozzle approx. 3 mm ø).
- Apply sealant as shown to the clean sealing surface of the oil pan. The bead of sealing compound must be
  - 3...4 mm thick
  - and run on inside of bolt holes -arrows-.
- Install oil pan and tighten bolts to prescribed torque => page 168 .

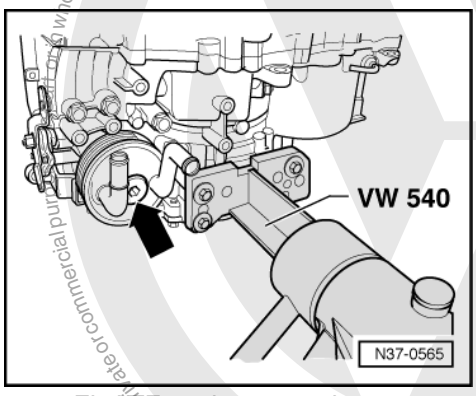

- -> Fit ATF cooler to gearbox -arrow-.
- Install torque converter => from Page 14 .
- Install gearbox => Page 65 .
- Fill with ATF then check ATF level and top-up => Page 76 .

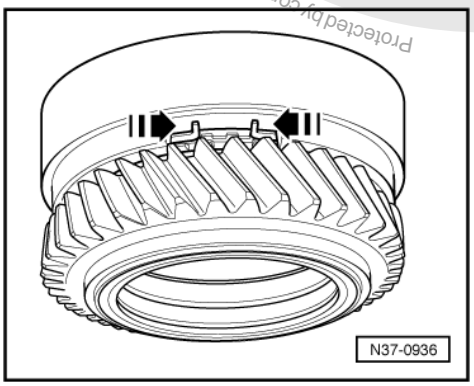

Assembling planetary gearbox from manufacture date 07.99

Insert axial needle bearing in its fitted position =>Page 96

- -> Assembling input gear and annulus.

Protected by copyright. Copyright by Volkswagen AG. Volkswagen AG does not guarantee or accept any liability with respect to the correctness of information in this document. Copyright by Volkswagen AG. Reproduction in whole or in part is not permitted unless authorised by Volkswagen AG. Volkswagen AG does not guarantee or accept any liability with respect to the correctness of information in this document. Copyright by Volkswagen AG.
satelettronica

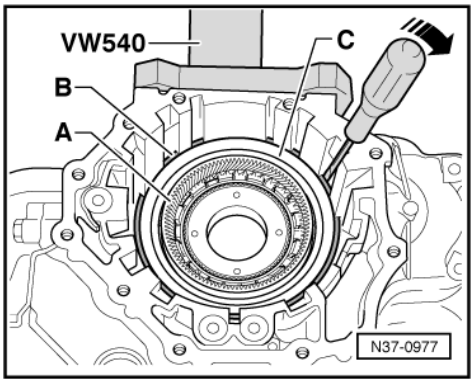

- Ensure correct installation position when inserting the free-wheel =>Page 141 .
- -> Install free-wheel complete with thrust washers -C-.
- Secure free-wheel in position with circlip -B-.
- Insert input gear with annulus -A-.

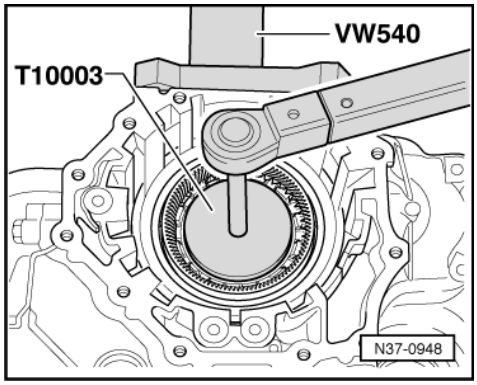

- Insert new locking plate with the lugs in the recesses in the gearbox housing.
- -> Tighten clamping bolt to prescribed torque => page 93.

1 - V.A.G 1332

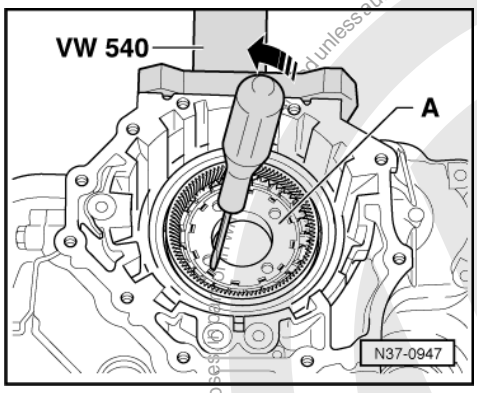

- -> Lock clamping bolt with locking plate.

Protected by copyright. Copying for private or commercial purposes, in part or in whole, is not permitted unless authorised by Volkswagen AG. Copyright by Volkswagen AG. Volkswagen AG does not guarantee or accept any liability with respect to the correctness of information in this document.
satelettronica

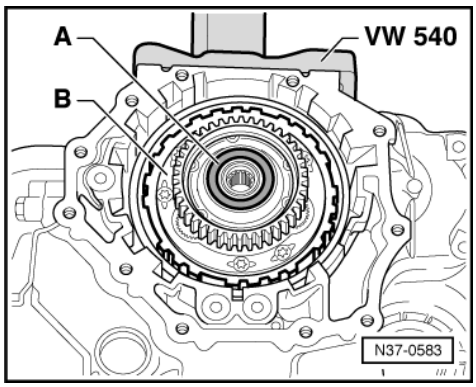

- -> Place axial needle bearing -A- in correct fitted position (blackened surface remains visible) on the planet carrier -B-.
- Insert planet carrier simultaneously in the annulus and free-wheel. When inserting into the free-wheel the planet carrier will turn anti-clockwise.
- Functional check of freewheel:

It should only be possible to turn the planet carrier anti-clockwise (free- wheel open).

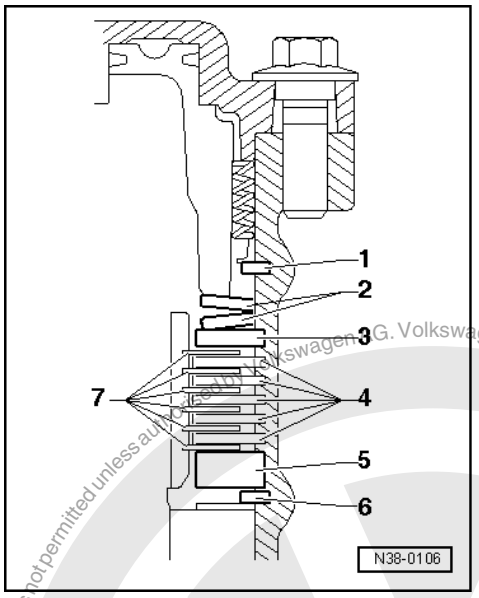

- -> Install -B1- plates as follows:
  - First place a pressure plate -5- (always 4.4mm thick) onto the circlip -6-.
  - Insert the -B1- inner plates -7- and outer plates -4-.
  - Place on the thrust plate -3-.
  - Insert dished springs -2- in correct installation position (larger diameter faces one another).
  - Install circlip -1-.
- Perform measurement check of -B1-
  => Page 128

Protected by copyright. Copying for private or commercial purposes, in part or in whole, is not permitted unless authorised by Volkswagen AG. Volkswagen AG does not guarantee or accept any liability with respect to the correctness of information in this document. Copyright by Volkswagen AG.
satelettronica

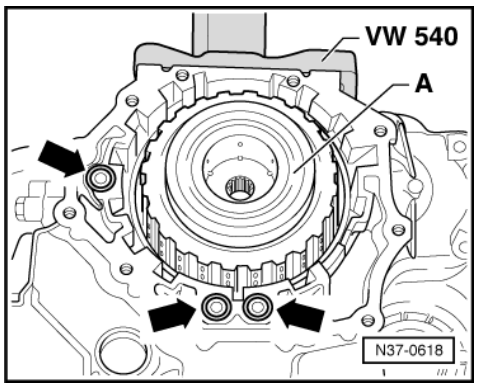

- -> Inserting 3rd and 4th gear clutch -K3-.
- Place O rings -arrows- onto the gearbox housing.

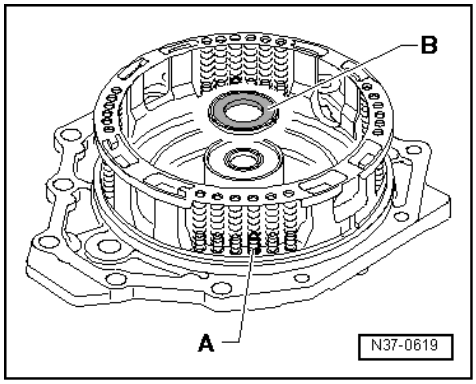

- -> Press the spring cage onto the guide pins of the -B1- piston.

There are four guide pins -A- which are thicker and hold the spring cage in place.

- Coat axial needle bearing -B- with ATF so that it remains in position when fitting the gearbox housing cover.

Fit axial needle bearing in correct position (blackened surface remains visible) on the cover.

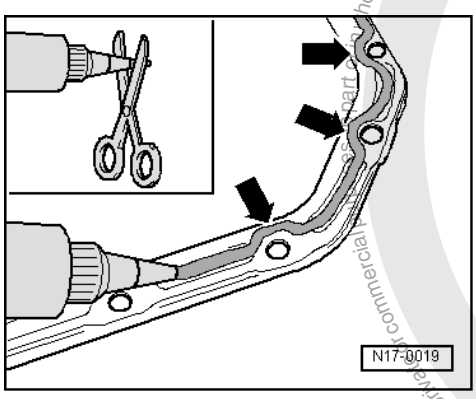

- -> Cut off tube nozzle at forward marking (nozzle approx. 3 mm ø).
- Apply sealant D 176 404 A2 onto clean sealing surface of the cover. The sealant bead must be
  - 3...4 mm thick.
- Install gearbox housing cover.

Protected by copyright. Copying for private or commercial purposes, in part or in whole is not permitted unless authorised by Volkswagen AG. Volkswagen AG does not guarantee or accept any liability with respect to the correctness of information in this document. Copyright by Volkswagen AG.
satelettronica

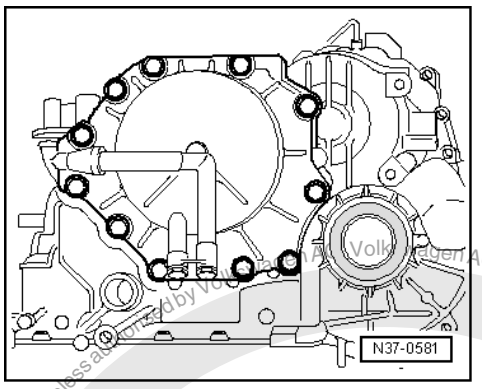

- -> Tighten bolts evenly and in diagonal sequence to prescribed torque => page 87 .
- Turn gearbox through 180°.

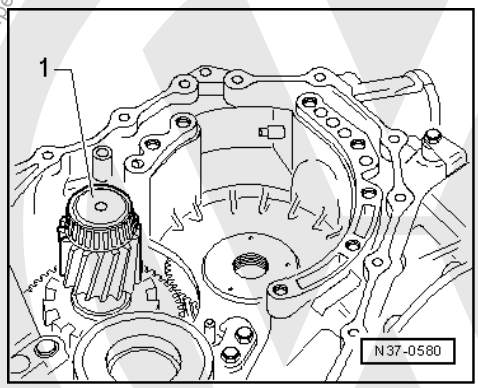

- -> Insert pinion shaft -1-.

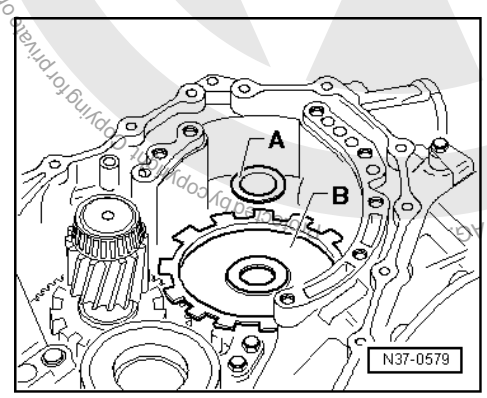

- -> Insert large sun wheel -B- in the gearbox housing.

Place roller bearing -A- in correct position (smooth surface remains visible) on the large sun wheel.

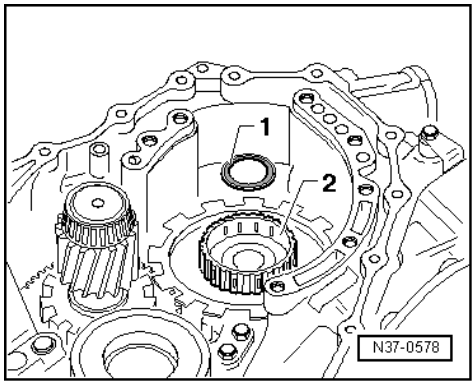

Copyright by Volkswagen AG. Volkswagen AG does not guarantee or accept any liability with respect to the correctness of information in this document. Copyright by Volkswagen AG. Copying for private or commercial purposes, in part or in whole, is not permitted unless authorised by Volkswagen AG.
satelettronica

- -> Insert input shaft -2- into large sun wheel.

Place axial needle bearing -1- in correct fitted position (blackened side remains visible) onto the input shaft.

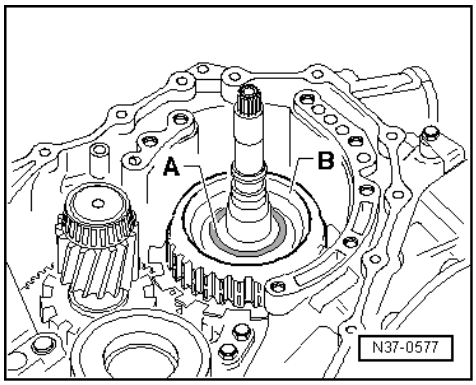

- -> Insert 1st to 3rd gear clutch -B-.

Place axial needle bearing -A- in correct fitted position (blackened surface remains visible) into the 1st to 3rd gear clutch.

If individual parts of the planetary gearbox have been replaced the axial needle bearing must be recalculated =>Adjusting clutch clearance, from page 132 .

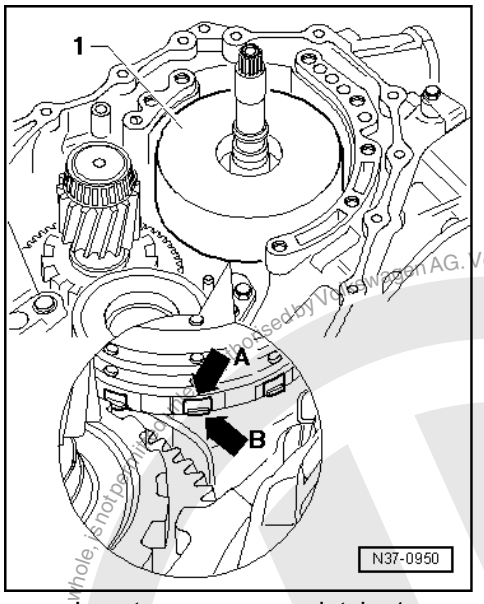

- -> Insert reverse gear clutch -1-.

Cut outs -A- must be placed over tabs -B-.

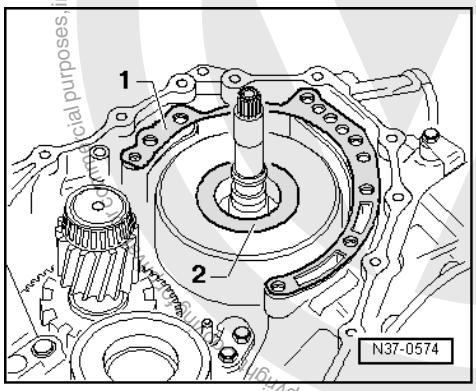

Protected by copyright. Copyright by Volkswagen AG. Volkswagen AG does not guarantee or accept any liability with respect to the correctness of information in this document. Copyright by Volkswagen AG. Reproduced by Volkswagen AG. Volkswagen AG does not guarantee or accept any liability with respect to the correctness of information in this document. Copyright by Volkswagen AG.
satelettronica

- -> Place shim -2- onto the reverse gear clutch -K1-.

If individual parts of the planetary gearbox have been replaced the size of the shim must be recalculated =>Adjusting clutch clearance, from page 132 .
- Fit gasket -1- for ATF pump.

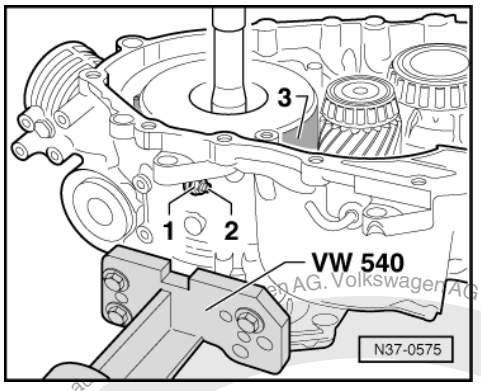

- -> Install brake band as follows:
  - Fit new adjustment screw -2- with lock nut -1- in gearbox.

  Do not screw in as far as the coating part of the thread. The final tightening of the adjustment screw is not carried out until the ATF pump has been installed =>adjusting the brake band, Page 131 .
  - Install brake band -3-.

- Align ATF pump to gearbox housing. When inserting, take care with shim, gasket for ATF pump and ATF pump piston rings.

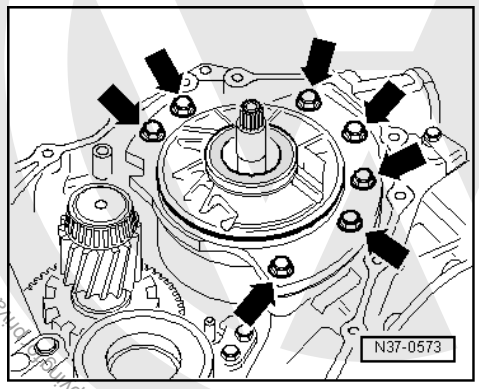

- -> Tighten ATF pump bolts -arrows- to prescribed torque => page 91 .

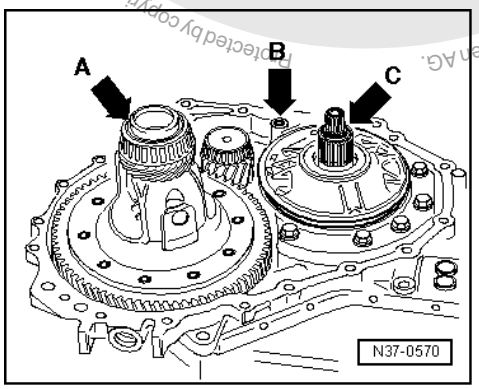

- -> Install differential -arrow A-.
- Place new O rings -arrow B- on gearbox housing and in turbine shaft -arrow C-.
- Apply sealant D 176 404 A2 to the clean sealing surface of the torque converter housing. The sealant bead must be
  - 3...4 mm thick

Protected by copyright. Copyright by Volkswagen AG. Volkswagen AG does not guarantee or accept any liability with respect to the correctness of information in this document. Copyright by Volkswagen AG. Private or commercial purposes, in part or in whole, is not permitted unless authorised by Volkswagen AG.
satelettronica

- Place torque converter housing on the gearbox housing; when doing this take care with dowel and ATF pump O ring.

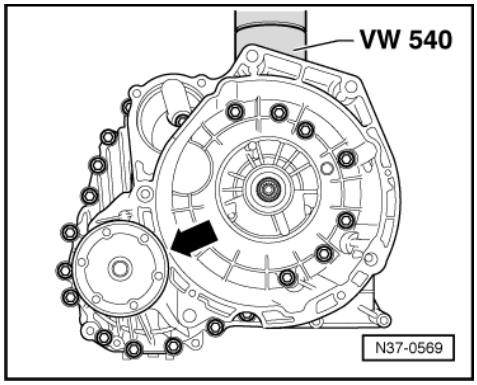

- -> Tighten bolts for torque converter housing to 30 Nm.
- Install left and right-hand flanged shafts -arrow- and tighten bolts to prescribed torque => from page 180 .
- Install plug with wiring harness for the solenoid valves.

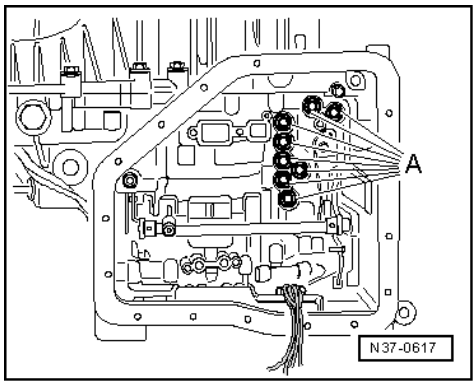

- -> Insert new O rings -A- in the gearbox housing.

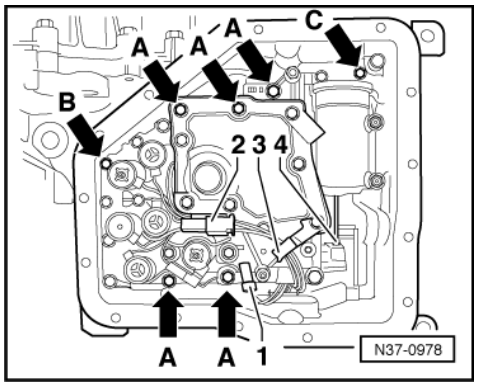

- -> Fit valve chest so that the pin of the detent plate engages in the groove of the selector spool valve -4-.
- Observe bolt length:

  A = M6 x 80 mm
  B = M6 x 68 mm
  C = M6 x 40 mm

- Tighten bolts to prescribed torque => page 166 .
- Attach solenoid valve connectors -2-.
- Clip wiring into holder -3-.
- Clip in ATF temperature sender -1-.
- Install ATF screen and tighten bolts to prescribed torque => page 168 .

Protected by copyright. Copying for private or commercial purposes, in part or in whole, is not permitted unless authorised by Volkswagen AG. Volkswagen AG does not guarantee or accept any liability with respect to the correctness of information in this document. Copyright by Volkswagen AG.
satelettronica

Apply sealant D176 404 A2 as follows to the oil pan:

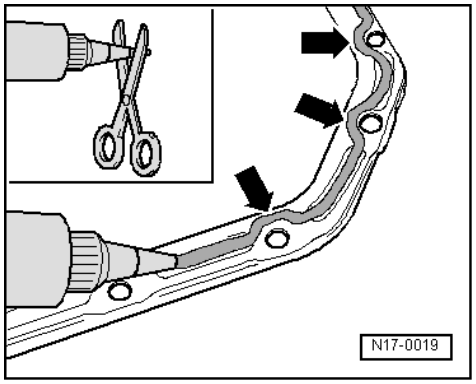

- -> Cut off tube nozzle at forward marking (nozzle approx. 3 mm ø).
- Apply sealant as shown to the clean sealing surface of the oil pan. The bead of sealing compound must be
  - 3...4 mm thick
  - and run on inside of bolt holes -arrows-.
- Install oil pan and tighten bolts to prescribed torque => page 168 .

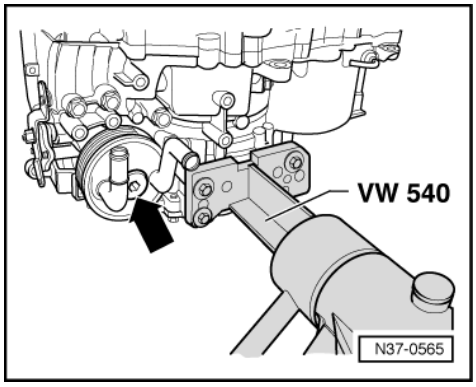

- -> Fit ATF cooler to gearbox -arrow-.
- Install torque converter => from Page 14 .
- Install gearbox => Page 65 .
- Fill with ATF then check ATF level and top-up => Page 76 .

Protected by copyright. Copying for private or commercial purposes, in part or in whole, is not permitted unless authorised by Volkswagen AG. Volkswagen AG does not guarantee or accept any liability with respect to the correctness of information in this document. Copyright by Volkswagen AG.
satelettronica

6.7 - Overview of all planetary gearbox adjustments

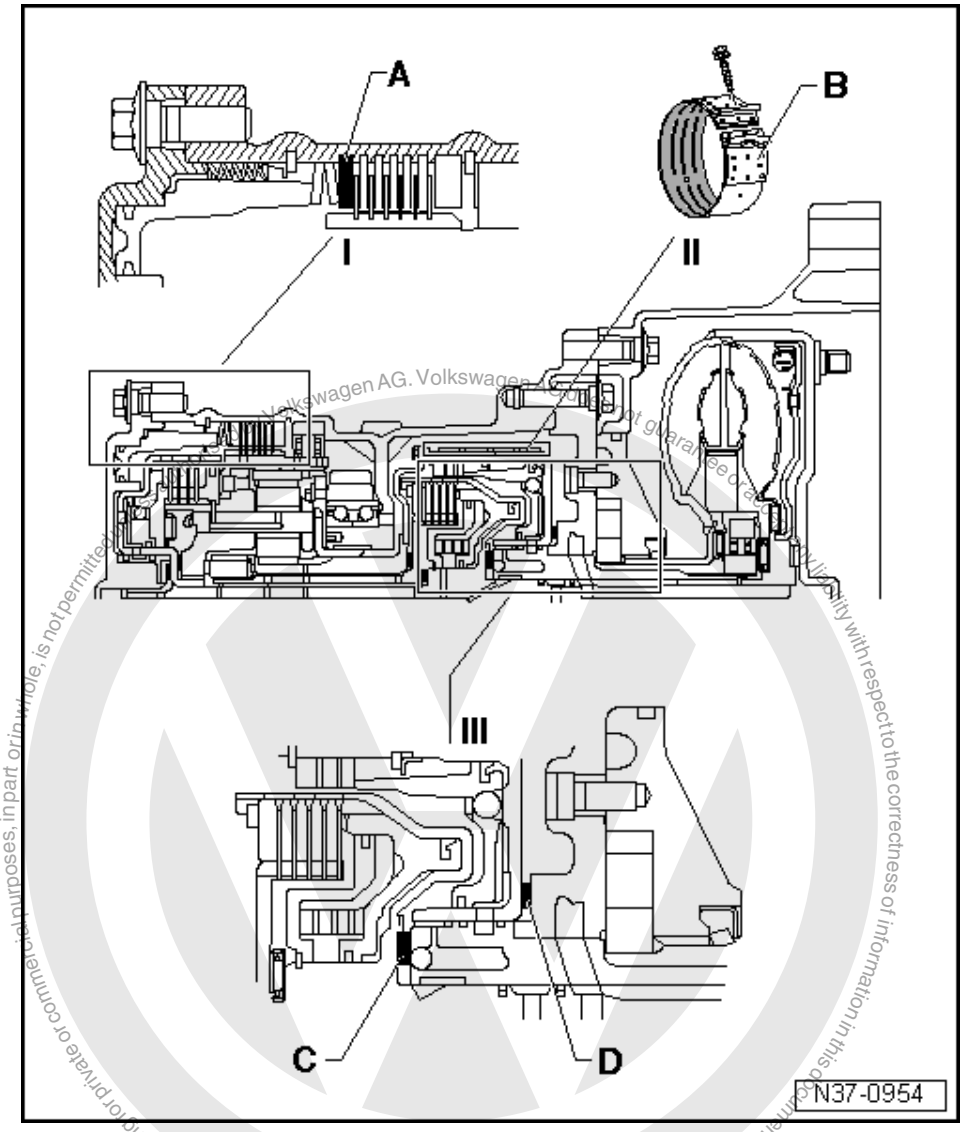

I = Reverse gear brake -B1-

- ◆ A - Pressure plate
- - Determining thickness => adjusting reverse gear brake -B1-, Page 125

II = 2nd and 4th gear brake -B2-

- ◆ B - Brake band
- - Adjusting brake band => adjusting 2nd and 4th gear brake -B2-, from Page 129

III = Clutch play

- ◆ C - Axial needle bearing
- - Determining thickness => adjusting clutch play between -K1- and ATF pump, Page 132
- ◆ D - Shim
- - Determining thickness => adjusting clutch play between -K2- and ATF pump, Page 132

satelettronica

6.8 - Adjusting reverse gear brake -B1-

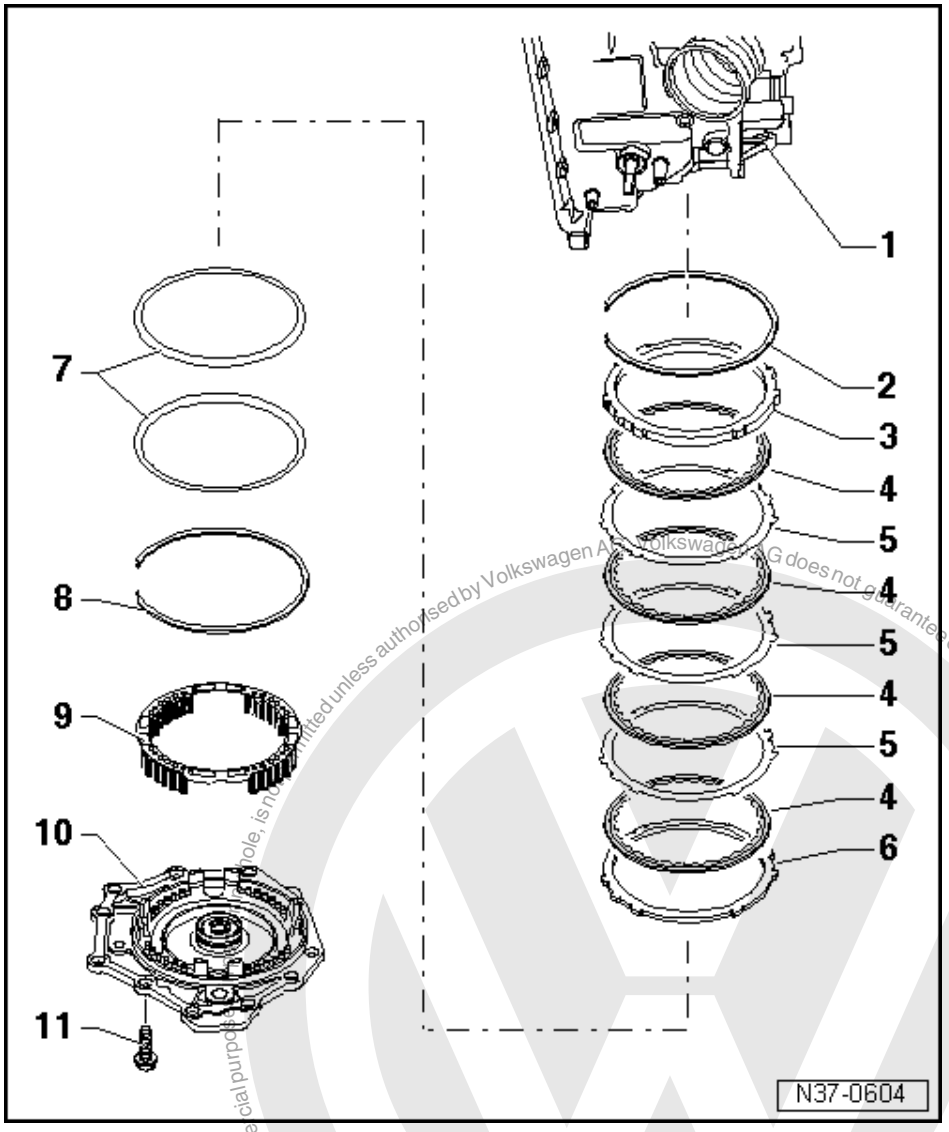

- Install components to adjust reverse gear brake -B1- in gearbox housing =>assembling planetary gearbox, Page 107 .

1 Gearbox housing
2 Circlip
3 Thrust plate
4 Inner plate -B1-
- Quantity => from Page 3

5 Outer plate -B1-
- Quantity => from Page 3

6 Pressure plate
- Install to adjust
- After the measuring process install pressure plate of the correct thickness

Protected by copyright. Copying for private or commercial purposes, in whole or in part, is not permitted unless authorised by Volkswagen AG. Volkswagen AG does not guarantee or accept any liability with respect to the correctness of information in this document. Copyright by Volkswagen AG.
satelettronica

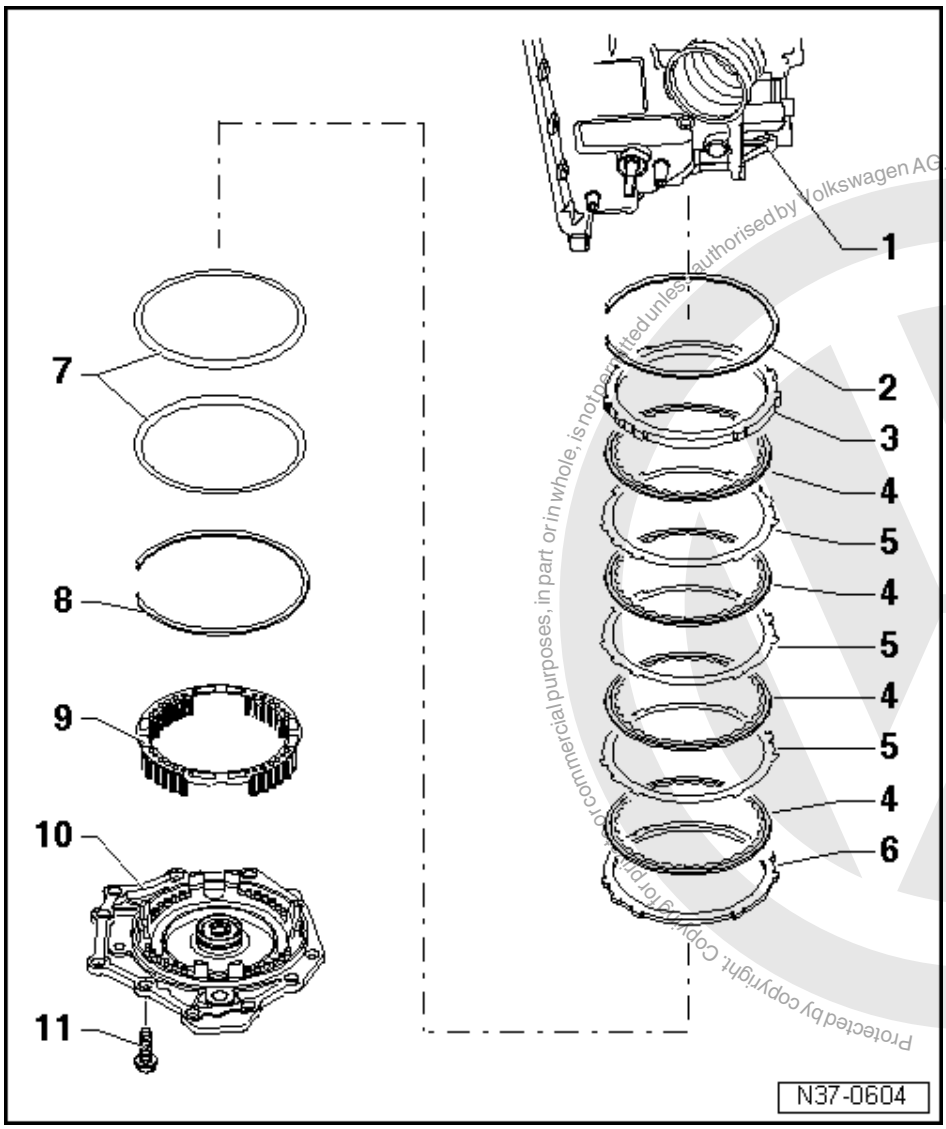

7 Dished washer
- Observe installation position: larger diameters face one another

8 Circlip

9 Spring supporting plate
- With springs

10 Gearbox housing cover
- With -B1- piston
- Before removing or installing the cover, remove speed sender -G68-

=> Self-diagnosis for automatic gearbox 001; Repair group 01; Electric/electronic components Electric/electronic components

11 Bolt, 20 Nm

Protected by copyright. Copying for commercial purposes, in part or in whole, is not permitted unless authorised by Volkswagen AG. Volkswagen AG does not guarantee or accept any liability with respect to the correctness of information in this document. Copyright by Volkswagen AG.
satelettronica

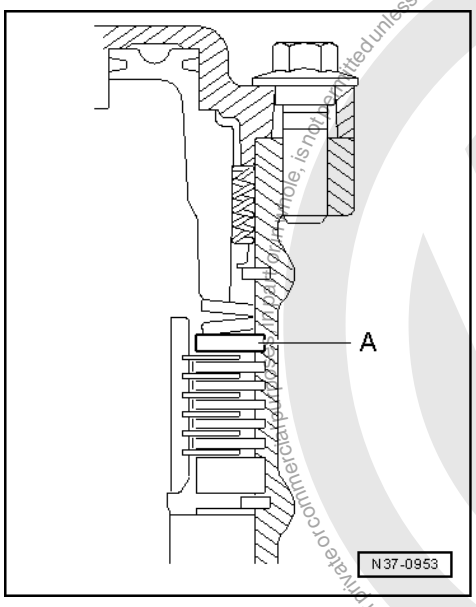

-> Pressure plate to be measured -A-

- Install all components to adjust the reverse gear brake -B1- into gearbox housing => Page 129 .

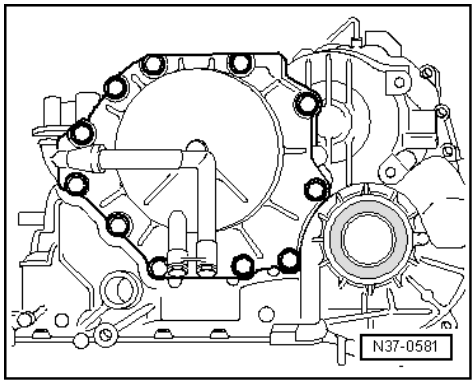

- -> Tighten bolts evenly and in diagonal sequence to prescribed torque => page 87 .

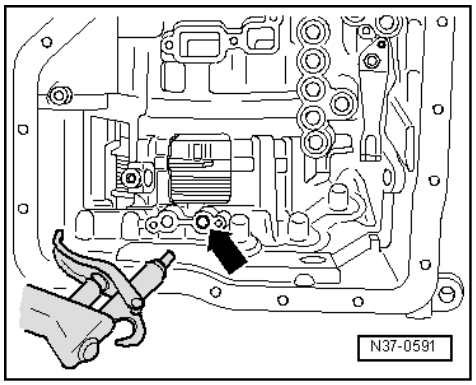

- -> Blow compressed air into pressure channel -arrow-. The piston must press the plates together audibly. When the compressed air is released, the piston must move back to its rest position.

Protected by copyright. Copying for private or commercial purposes, in whole or in part, is not permitted unless authorised by Volkswagen AG. Volkswagen AG does not guarantee or accept any liability with respect to the correctness of information in this document. Copyright by Volkswagen AG.
satelettronica

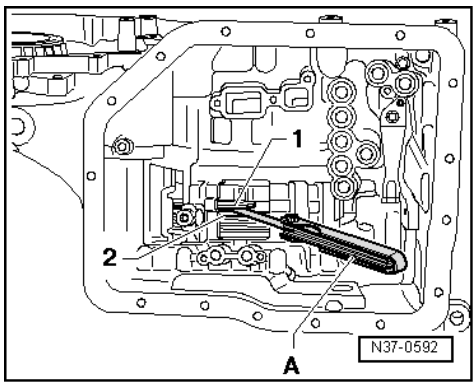

Reverse gear brake -B1- check measurement

- -> Measuring the play for the reverse gear brake -B1-.
- Measure play between circlip -1- and pressure plate -2- with a feeler gauge -A-.

  Play:
  min. = 0.8 mm
  max. = 1.1 mm

satelettronica
Protected by copyright. Copying for private or commercial purposes, in part or in whole, is not permitted unless authorised by Volkswagen AG. Volkswagen AG does not guarantee or accept any liability with respect to the correctness of information in this document. Copyright by Volkswagen AG.

6.9 - Adjusting 2nd and 4th gear brake -B2-

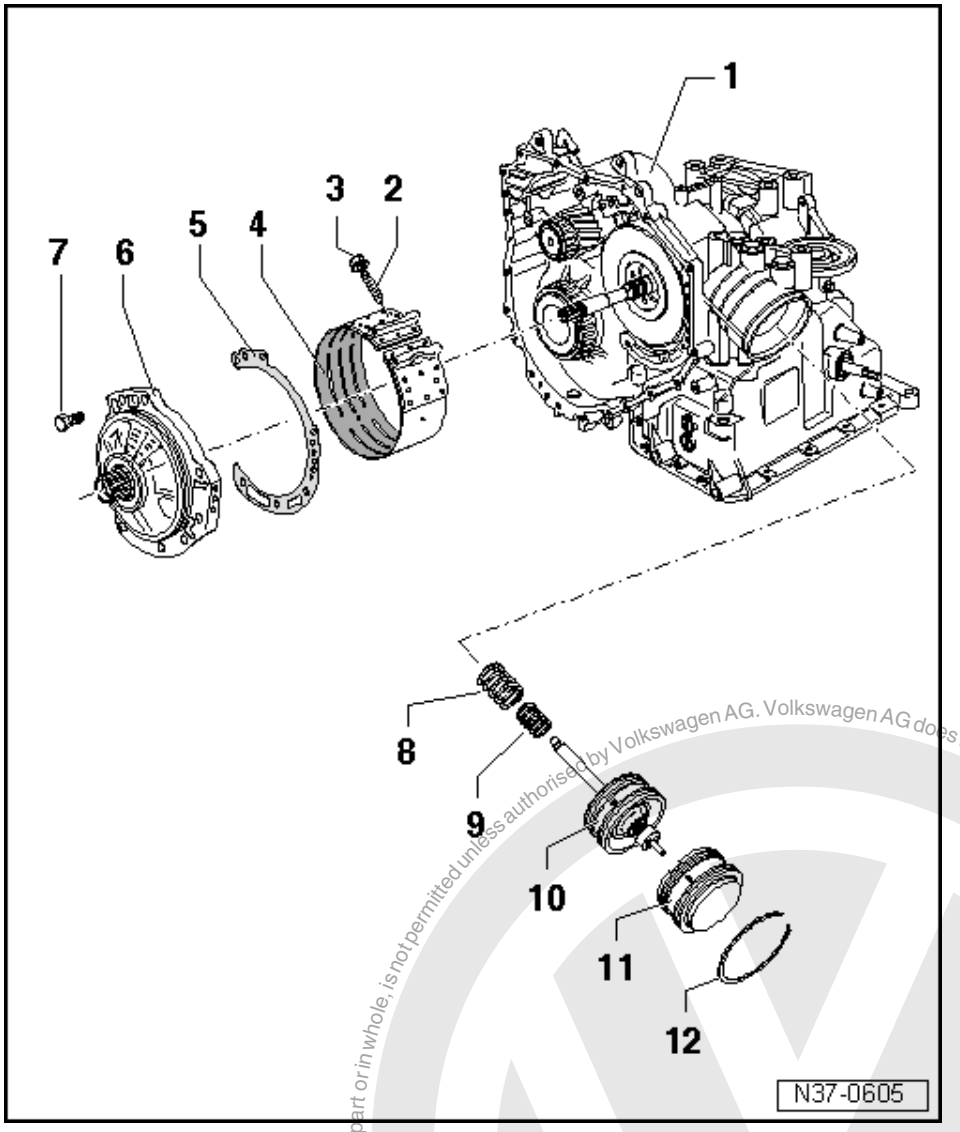

- Install components to adjust the 2nd and 4th gear brake -B2- => assembling planetary gearbox, Page 107 .

1 Gearbox housing
- Planetary gearbox installed up to small input shaft => assembling planetary gearbox, Page 107

2 Adjustment bolt
- For brake band -B2-
- Always renew
- Screw in until it makes contact in the formed piece of the brake band -B2-

3 Nut, 45 Nm

4 Brake band -B2-

Protected by copyright. Copying for private or commercial purposes, part or in whole, is not permitted unless authorised by Volkswagen AG. Volkswagen AG does not guarantee or accept any liability with respect to the correctness of information in this document. Copyright by Volkswagen AG.
satelettronica

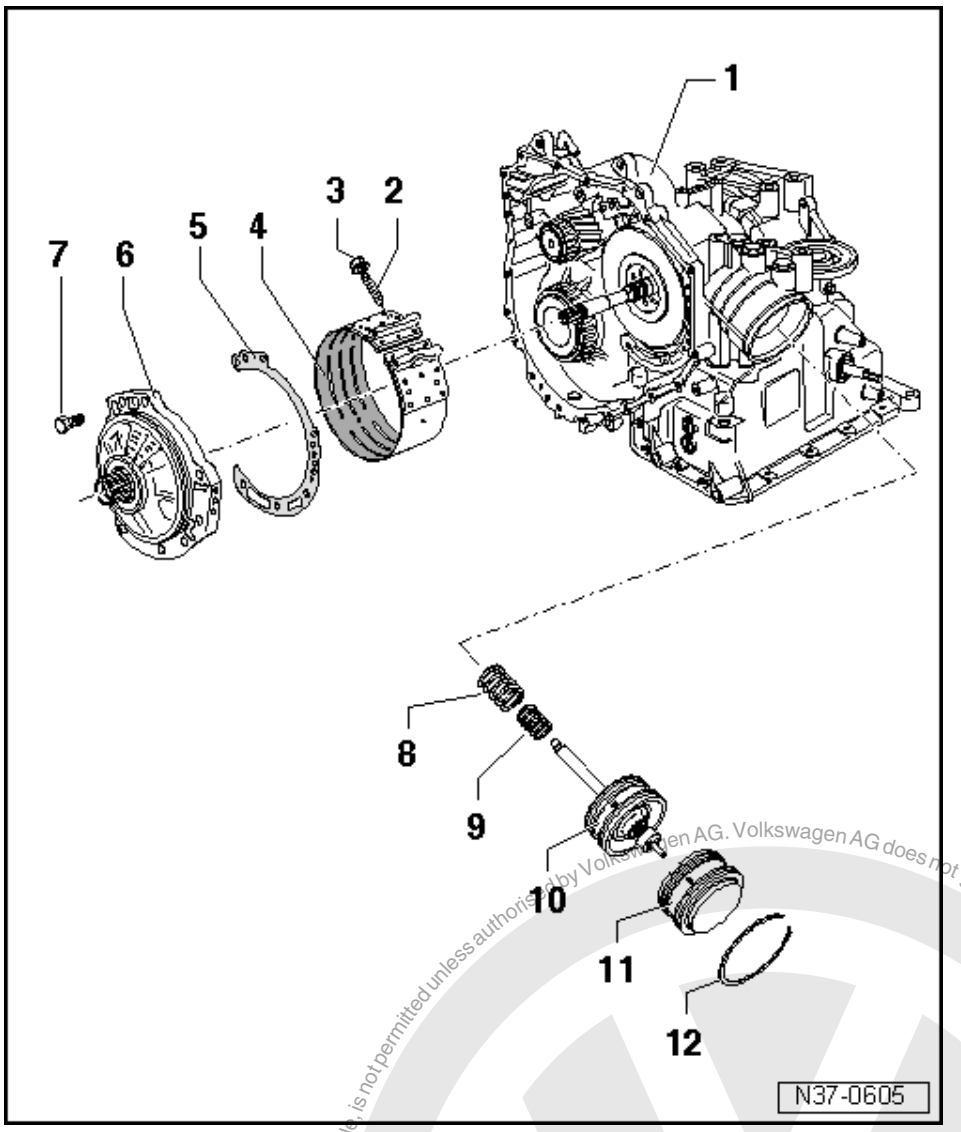

5 Gasket
- For ATF pump

6 ATF pump
- Dismantling and assembling => Page 139

7 Bolt, 20 Nm
8 Spring
9 Spring
10 Operating piston for 2nd and 4th gear brake
- Insert push rod in the formed piece of the brake band

11 Cover
12 Circlip

Protected by copyright. Copying for private or commercial purposes, in part or in whole, is not permitted unless authorised by Volkswagen AG. Volkswagen AG does not guarantee or accept any liability with respect to the correctness of information in this document. Copyright by Volkswagen AG.
satelettronica

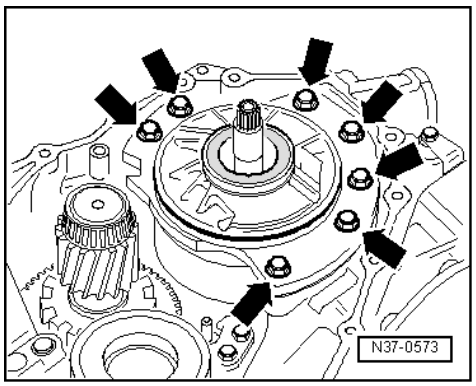

- -> Tighten ATF pump securing bolts -arrows- to 20 Nm.

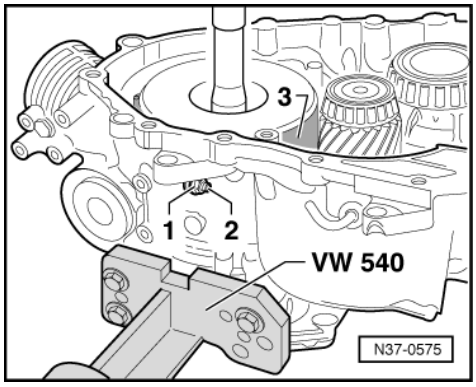

-> Adjusting brake band -3-

- Tighten adjustment screw -2- to 5 Nm.
- Turn adjustment screw back by 2.5 turns.
- Tighten nut -1- to 45 Nm. When doing this ensure that the adjustment screw does not turn.

satelettronica

Protected by copyright. Copying for private or commercial purposes, in part or in whole, is not permitted unless authorised by Volkswagen AG. Volkswagen AG does not guarantee or accept any liability with respect to the correctness of information in this document. Copyright by Volkswagen AG.

6.10 - Adjusting clutch play

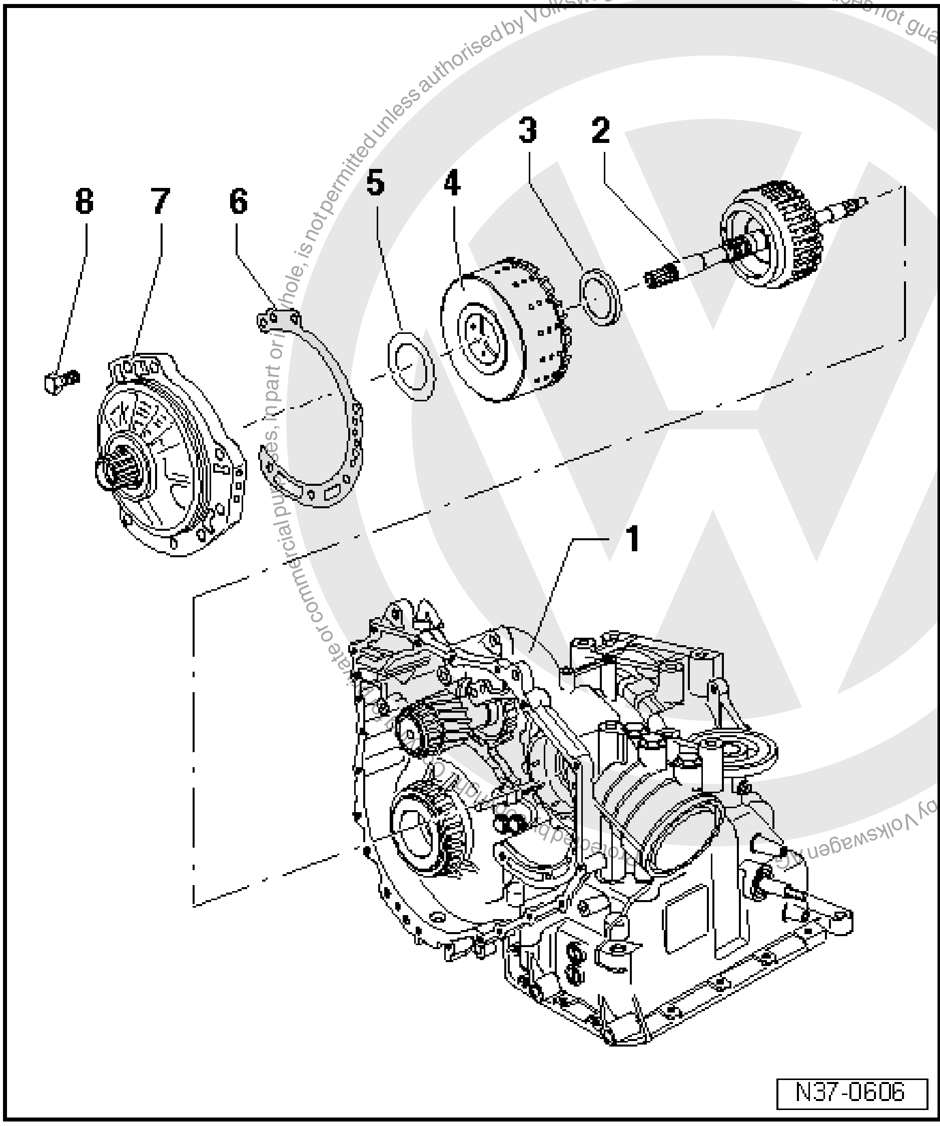

Protected by copyright. Copying for private or commercial purposes, in part or in whole, is not permitted unless authorised by Volkswagen AG. Volkswagen AG does not guarantee or accept any liability with respect to the correctness of information in this document. Copyright by Volkswagen AG.

- To adjust clutch play, install components without axial needle bearing -item 107 .
- Adjusting clutch play between -K1- and AT pump => Page 134
- Adjusting clutch play between -K2- and ATF pump => Page 136
- Perform check measurement (clutch play) =>Page 138

1 Gearbox housing

- Planetary gearbox installed up to small input shaft => assembling planetary gearbox, Page 107

2 1st to 3rd gear clutch -K1- with turbine shaft

sateltronica

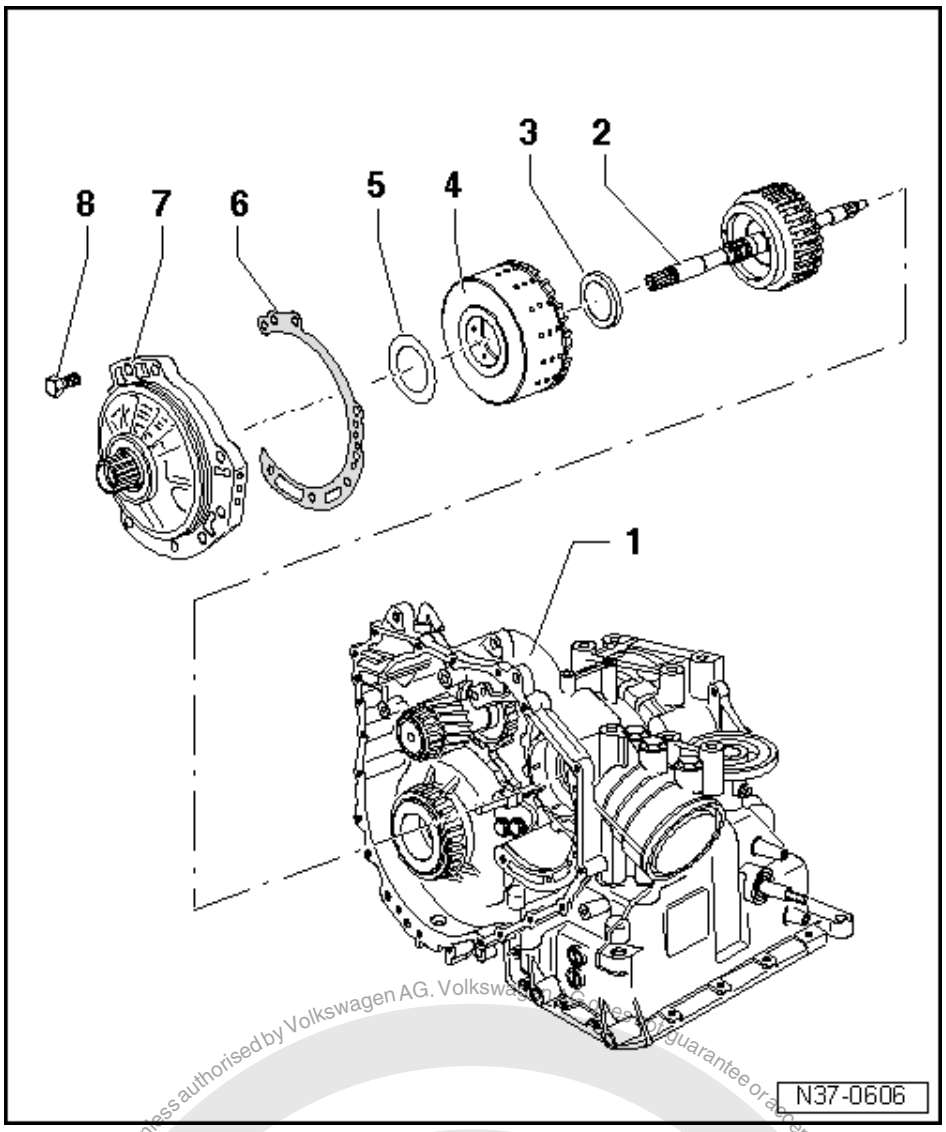

3 Axial needle bearing with washer
- Observe installation position =>Page 96
- Do not install when adjusting clutch play

4 Reverse gear clutch -K2-

5 Shim
- Do not install when adjusting clutch play

6 Gasket
- For ATF pump

7 ATF pump

8 Bolt, 20 Nm

satelettronica
Protected by copyright. Copying for private or commercial purposes, in part or in whole, is not permitted unless authorised by Volkswagen AG. Volkswagen AG does not guarantee or accept any liability with respect to the correctness of information in this document. Copyright by Volkswagen AG.

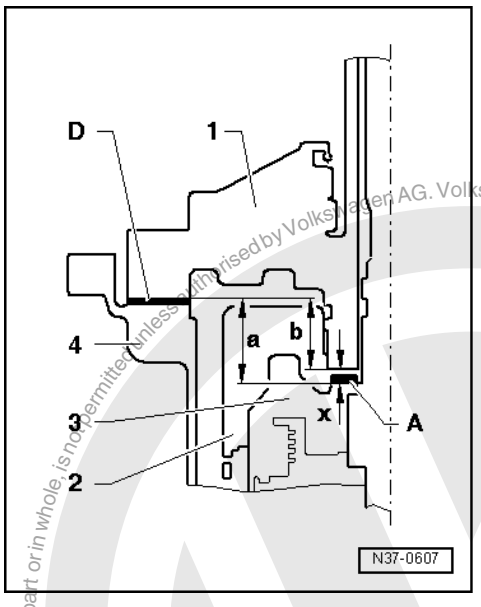

Adjusting clutch play between -K1- and ATF pump

-> Calculate thickness for the axial needle bearing -A-

The thickness of the axial needle bearing is determined by the gap "x" and is to be selected from the table, => Page 136 .

Gap x = a - b

A - Axial needle bearing (not installed when performing measurement).

D - Gasket

1 - ATF pump

2 - Reverse gear clutch -K2-

3 - 1st to 3rd gear clutch -K1-

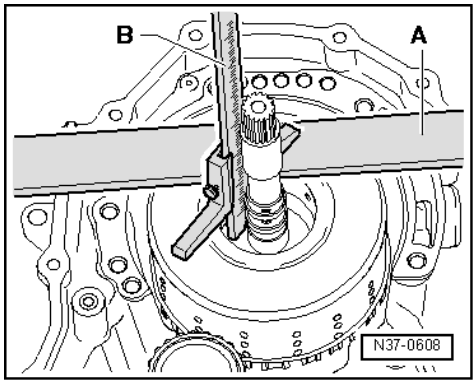

4 - Gearbox housing

Calculating "a":

- -> Place straightedge "A" onto gearbox housing.
- Measure distance to -K1- using a depth gauge "B".

Protected by copyright. Copying for private or commercial purposes, in part or in whole, is not permitted unless authorised by Volkswagen AG. Volkswagen AG does not guarantee or accept any liability with respect to the correctness of information in this document. Copyright by Volkswagen AG.

satelettronica

Example:

Reading 1 = 54.8 mm

- Place gasket "C" on pump flange of the gearbox housing.

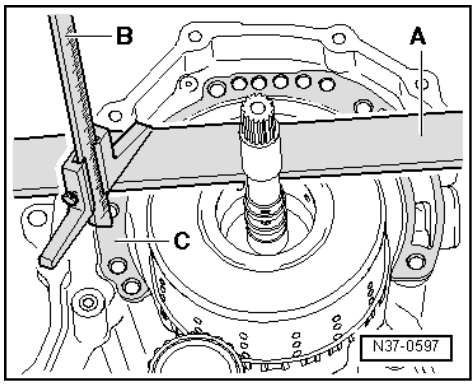

- -> Measure with depth gauge "B" to pump flange on gearbox housing.

Example:

Reading 2 = 23.2 mm

Measured value 1	=	54.8 mm
- Measured value 2	=	- 23.2 mm
Calculated figure a	=	31.6 mm

Calculating "b":

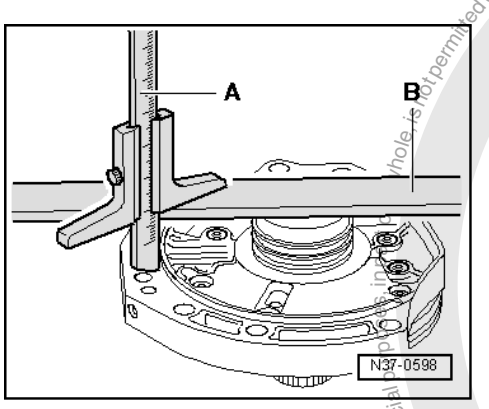

- -> Place straightedge "B" on pump housing.
- Measure with depth gauge "A" to pump flange.

Example:

Measured value	=	33.8 mm
- Straightedge	=	- 5.7 mm
Calculated figure b	=	28.1 mm

Gap x = a - b

= 31.6 mm - 28.1 mm = 3.5 mm

- Ascertain thickness of the axial needle bearing according to table and determine Part No. from parts catalogue.

satelettronica
Protected by copyright. Copying for private or commercial purposes, in part or in whole, is not permitted unless authorised by Volkswagen AG. Volkswagen AG does not guarantee or accept any liability with respect to the correctness of information in this document. Copyright by Volkswagen AG.

Table of "Axle needle bearings":

Gap "x" (mm)	Axle needle bearings (mm)
2.95 ... 3.14	2.70
3.15 ... 3.34	2.90
3.35 ... 3.54	3.10
3.55 ... 3.74	3.30
3.75 ... 3.94	3.50
3.95 ... 4.14	3.70

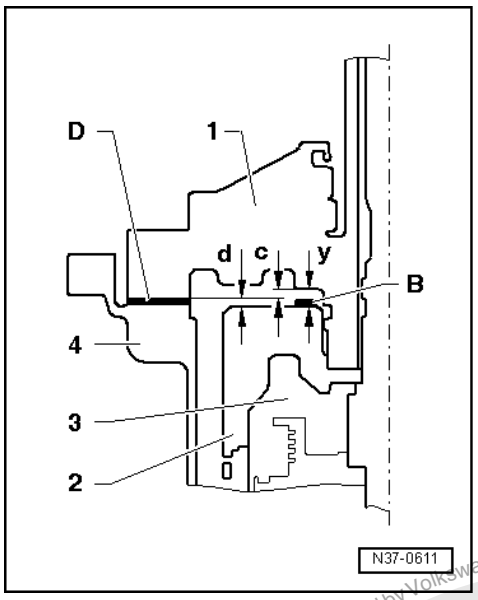

Adjusting clutch play between -K2- and ATF pump

-> Calculate thickness of shim -B-

Shim thickness is determined by gap "y" and selected from table, => Page 138 .

Gap y = c + d

B - Shim (not installed when performing measurement).

D - Gasket

1 - ATF pump

2 - Reverse gear clutch -K2-

3 - 1st to 3rd gear clutch -K1-

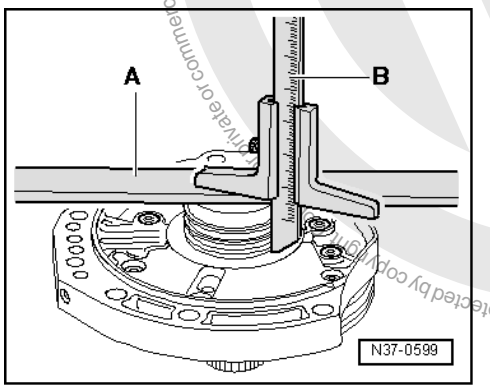

Protected by copyright. Copyright by Volkswagen AG.
Private or commercial purposes, in part or in whole, is not permitted unless authorised by Volkswagen AG. Volkswagen AG does not guarantee or accept any liability with respect to the correctness of information in this document.
satelettronica

4 - Gearbox housing

Calculating "b":

- -> Place straightedge "A" onto pump housing.
- Measure with depth gauge "B" to pump housing.

Example:
Reading 1 = 34.0 mm

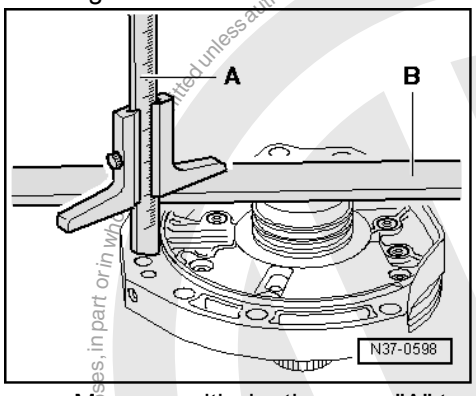

- -> Measure with depth gauge "A" to pump flange.

Example:
Reading 2 = 33.8 mm

Measured value 1	=	34.0 mm
- Measured value 2	=	- 33.8 mm
Calculated figure c	=	0.2 mm

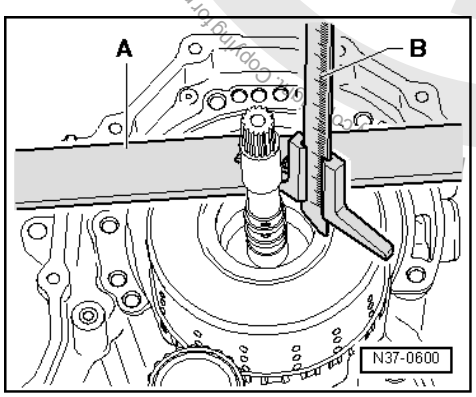

Calculating "d":

- -> Place straightedge "A" onto gearbox housing.
- Measure to collar of the reverse gear clutch -K2- with depth gauge "B".

Example:
Reading 1 = 88.5 mm

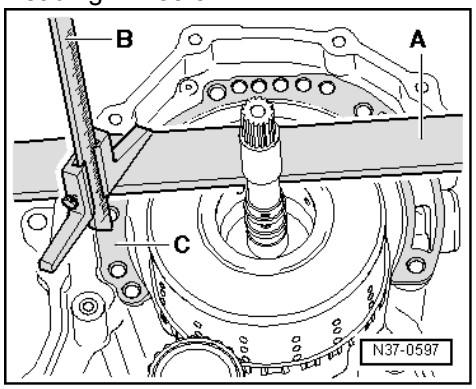

Copyright by Volkswagen AG. Copying or publication is not authorised unless authorised by Volkswagen AG. Volkswagen AG does not guarantee or accept any liability with respect to the correctness of information in this document. Copyright by Volkswagen AG.
satelettronica

- Place gasket "C" on pump flange of the gearbox housing.
- -> Measure with depth gauge "B" to pump flange on gearbox housing.

Example:

Reading 2 = 23.2 mm

Measured value 1	=	24.7 mm
- Measured value 2	=	- 23.2 mm
Calculated figure d	=	1.5 mm

Gap y = c + d

= 0.2 mm + 1.5 mm = 1.7 mm

- Ascertain thickness of shims according to table and determine Part No. from parts catalogue.

Table of "Shims":

Gap "y" (mm)	Shims (mm)
1.35 ... 1.54	0.80
1.55 ... 1.74	1.00
1.75 ... 1.94	1.20
1.95 ... 2.14	1.40
2.15 ... 2.34	1.60
2.35 ... 2.54	1.80
2.55 ... 2.74	2.00
2.75 ... 2.94	2.20

- After installing the ATF pump perform a check measurement of the clutch play =>Page 138 .

Check measurement (clutch play)

- The clutch play cannot be measured until the ATF pump has been installed.
- Attach dial gauge holder to gearbox housing and place dial gauge on turbine shaft with a preload of 1 mm.

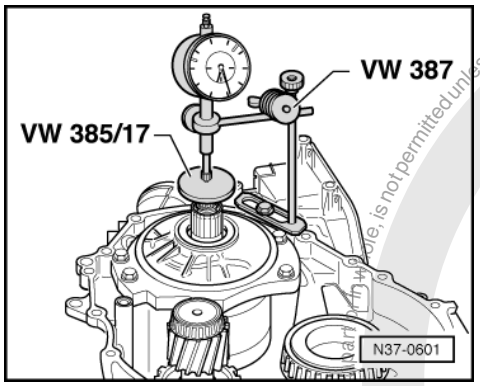

- -> Move turbine shaft up and down and read play on dial gauge.

  Play:
  min. = 0.25 mm
  max. = 0.55 mm

Protected by copyright. Copying for private or commercial purposes, in part or in whole, is not permitted unless authorised by Volkswagen AG. Volkswagen AG does not guarantee or accept any liability with respect to the correctness of information in this document. Copyright by Volkswagen AG.
satelettronica

38 - Gears, Hydraulic controls

1 - Dismantling and assembling ATF pump

1.1 - Dismantling and assembling ATF pump

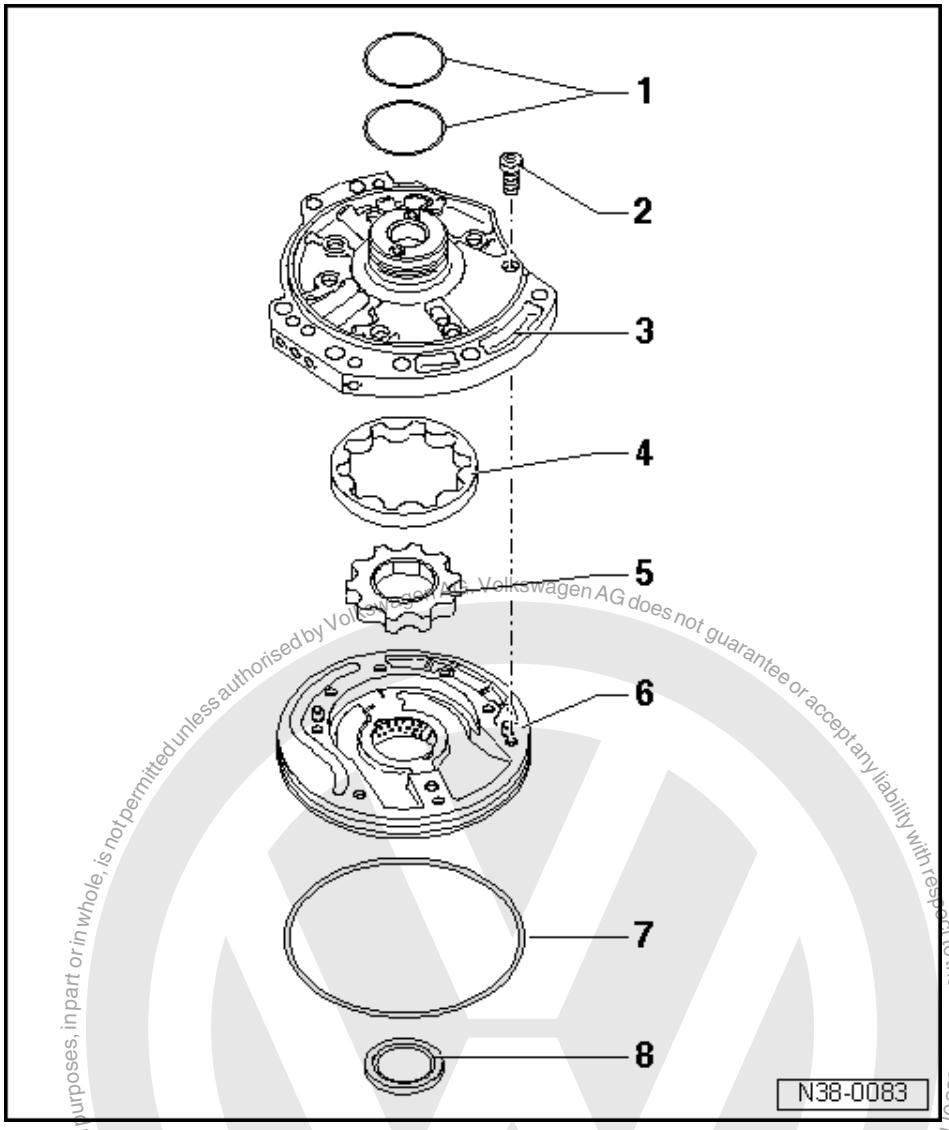

1 Piston ring
- Check that it is correctly located
- Do not overstretch

2 Bolt, 10 Nm

3 Stator support

4 Outer gear
- Check for wear
  => Fig. 1 and 2

5 Inner gear
- Check for wear
  => Fig. 1 and 2

6 Housing for ATF pump

7 O-ring

Protected by copyright. Copyright by Volkswagen AG.
Volkswagen AG does not guarantee or accept any liability with respect to the correctness of information in this document.
Copyright by Volkswagen AG. Reproduction for commercial purposes, in part or in whole, is not permitted unless authorised by Volkswagen AG.
satelettronica

- Always replace

8 Torque converter oil seal

- Removing and installing
  =>Page 13

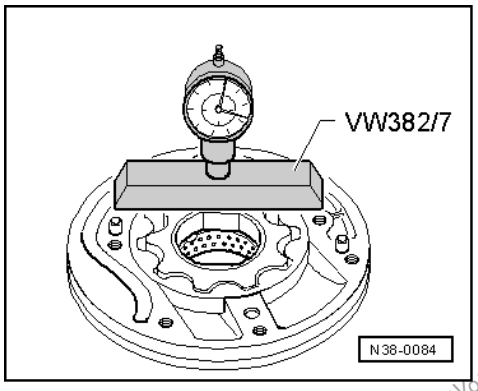

-> Fig.1 Measuring the axial wear of the outer and inner gears to ATF pump housing

- Place measuring appliance on the ATF pump housing.

Item measured	Wear limit mm
Gap between ATF pump housing and outer gear	0.04
Gap between ATF pump housing and inner gear	0.04

- If the wear limit is greater, renew pump.

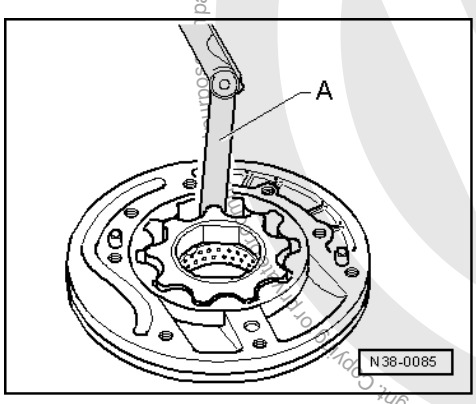

-> Fig.2 Measuring gap between outer and inner gears.

A - 0.15 mm feeler gauge

- The gears must be exchanged when it is possible to insert the feeler gauge between the outer and inner gears.

Protected by copyright. Copyright by Volkswagen AG.
Copyright by Volkswagen AG. Volkswagen AG does not guarantee or accept any liability with respect to the correctness of information in this document.
satelettronica

2 - Dismantling and assembling free-wheel

2.1 - Dismantling and assembling free-wheel

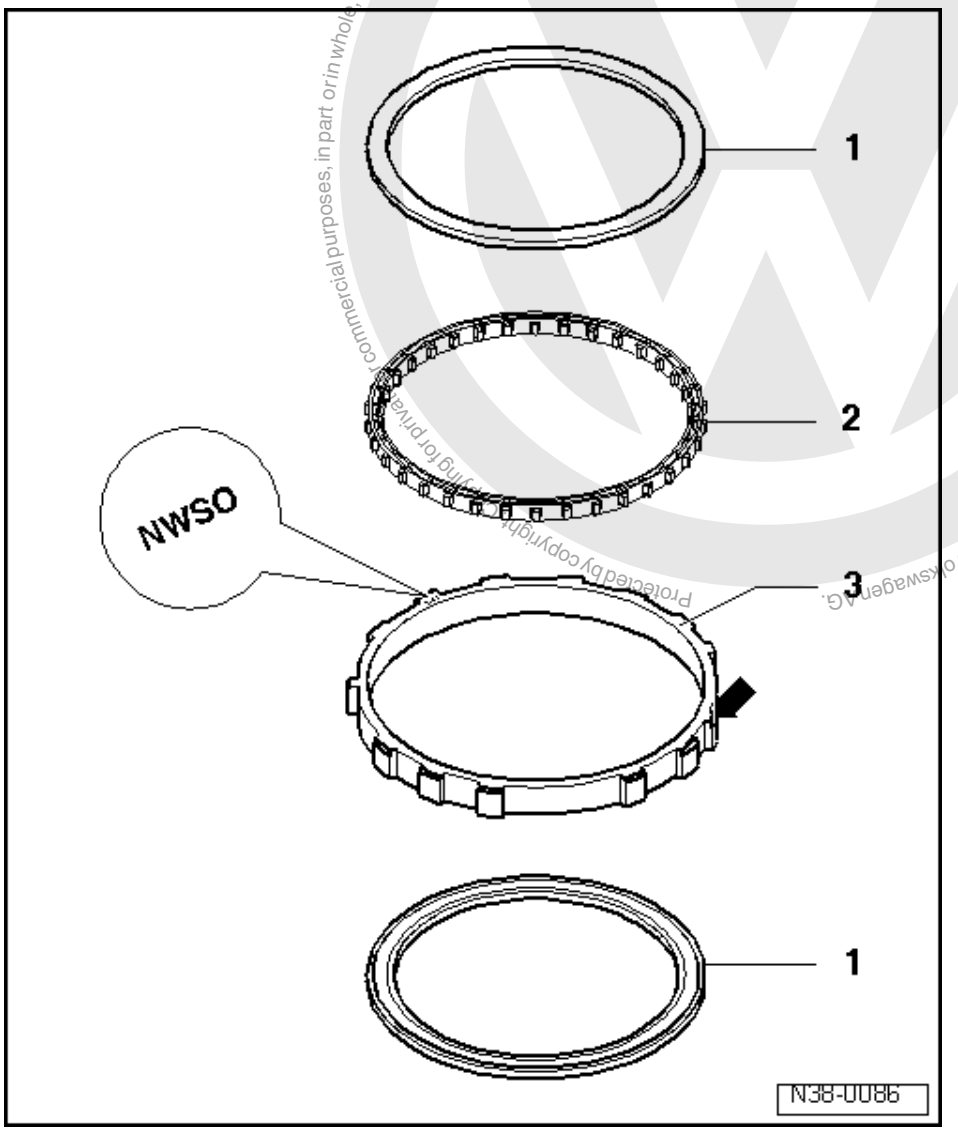

1 Thrust washer
- Place on clamping cage -item 2 -
- Smooth side faces outwards

2 Clamping cage
- Install in outer ring for free-wheel =>Fig. 1

3 Freewheel outer ring
- Installation position: Inscription and chamfer (arrow) face towards planet carrier

Protected by copyright. Copyright by Volkswagen AG. Volkswagen AG does not guarantee or accept any liability with respect to the correctness of information in this document. Copyright by Volkswagen AG. Commercial purposes, in part or in whole, is not permitted unless authorised by Volkswagen AG.
satelettronica

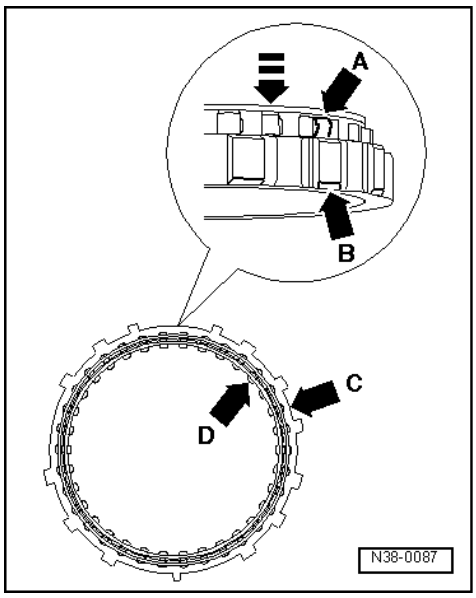

-> Fig.1 Assembling free-wheel

- Place outer ring -arrow C- on work bench with chamfer -arrow B- downwards.
- Place clamping cage -arrow D- on the outer ring with the conical guide lugs -arrow A- downwards on the outer ring.
- Press body of clamping cage inwards and at the same time press the cage over the guide lugs in the outer ring.
- Place thrust washers on the clamping cage.
- Functional check of freewheel:

• Place free-wheel in its installation position (inscription and chamfer upwards).
• Insert planet carrier in clamping cage.

Turn planet carrier to left - "free-wheel open"
Turn planet carrier to right - "free-wheel locked"

Protected by copyright. Copying for private or commercial purposes, in part or in whole, is not permitted unless authorised by Volkswagen AG. Volkswagen AG does not guarantee or accept any liability with respect to the correctness of information in this document. Copyright by Volkswagen AG.
satelettronica

3 - Dismantling and assembling 1st to 3rd gear clutch -K1-

3.1 - Dismantling and assembling 1st to 3rd gear clutch -K1-

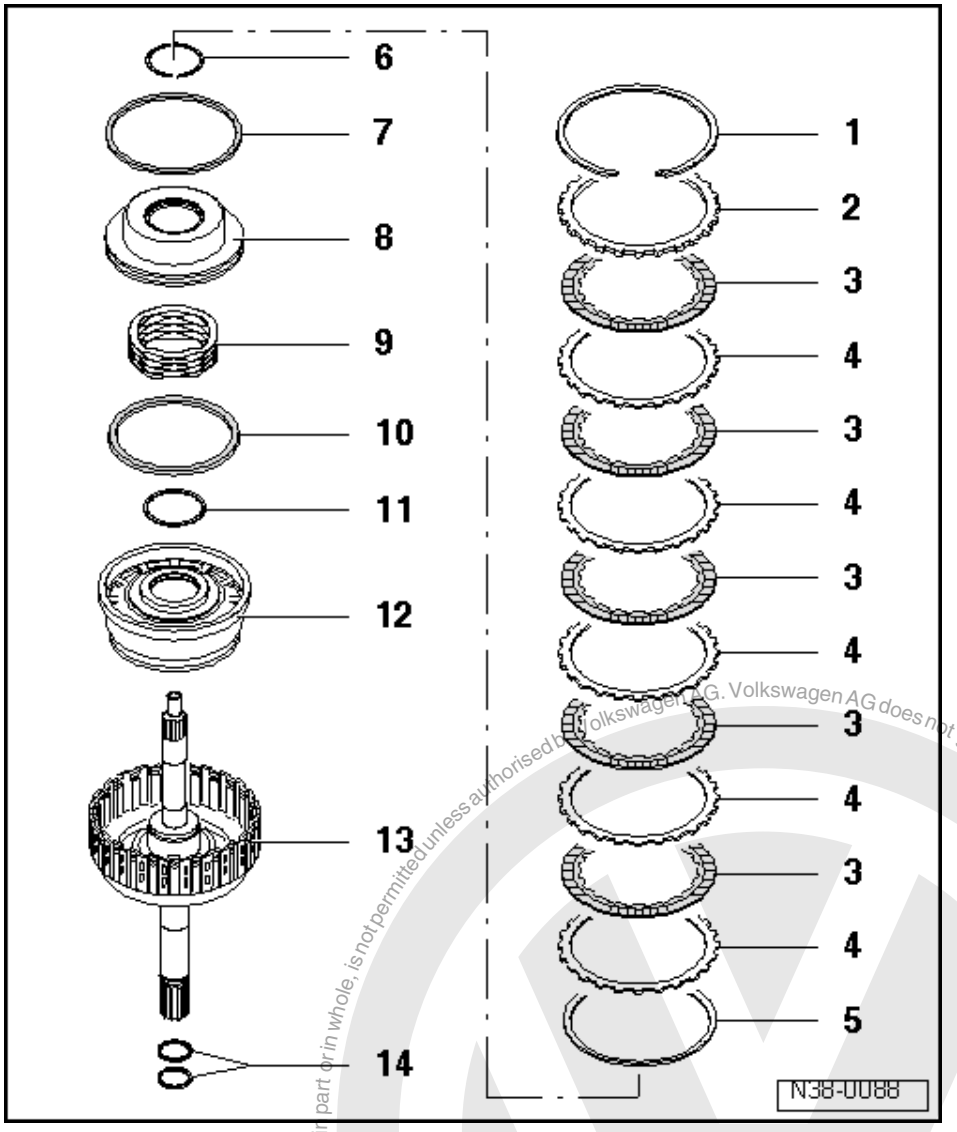

Functional check of clutch

=>Fig. 4

1 Circlip
- Lever out with screwdriver

2 Thrust plate
- Installing => Fig. 2
- Determining thickness => Fig. 3

3 Inner plate
- Installing => Fig. 2
- Quantity=> Page 3

4 Outer plate
- Installing => Fig. 2
- Quantity=> Page 3

5 Dished washer
- Installing => Fig. 2

Protected by copyright. Copying for private or commercial purposes, in part or in whole, is not permitted unless authorised by Volkswagen AG. Volkswagen AG does not guarantee or accept any liability with respect to the correctness of information in this document. Copyright by Volkswagen AG.
satelettronica

Protected by copyright. Copying for private or commercial purposes, in part or in whole, is not permitted unless authorised by Volkswagen AG. Volkswagen AG does not guarantee or accept any liability with respect to the correctness of information in this document. Copyright by Volkswagen AG.

6 Securing ring
- Removing and installing =>Fig. 1

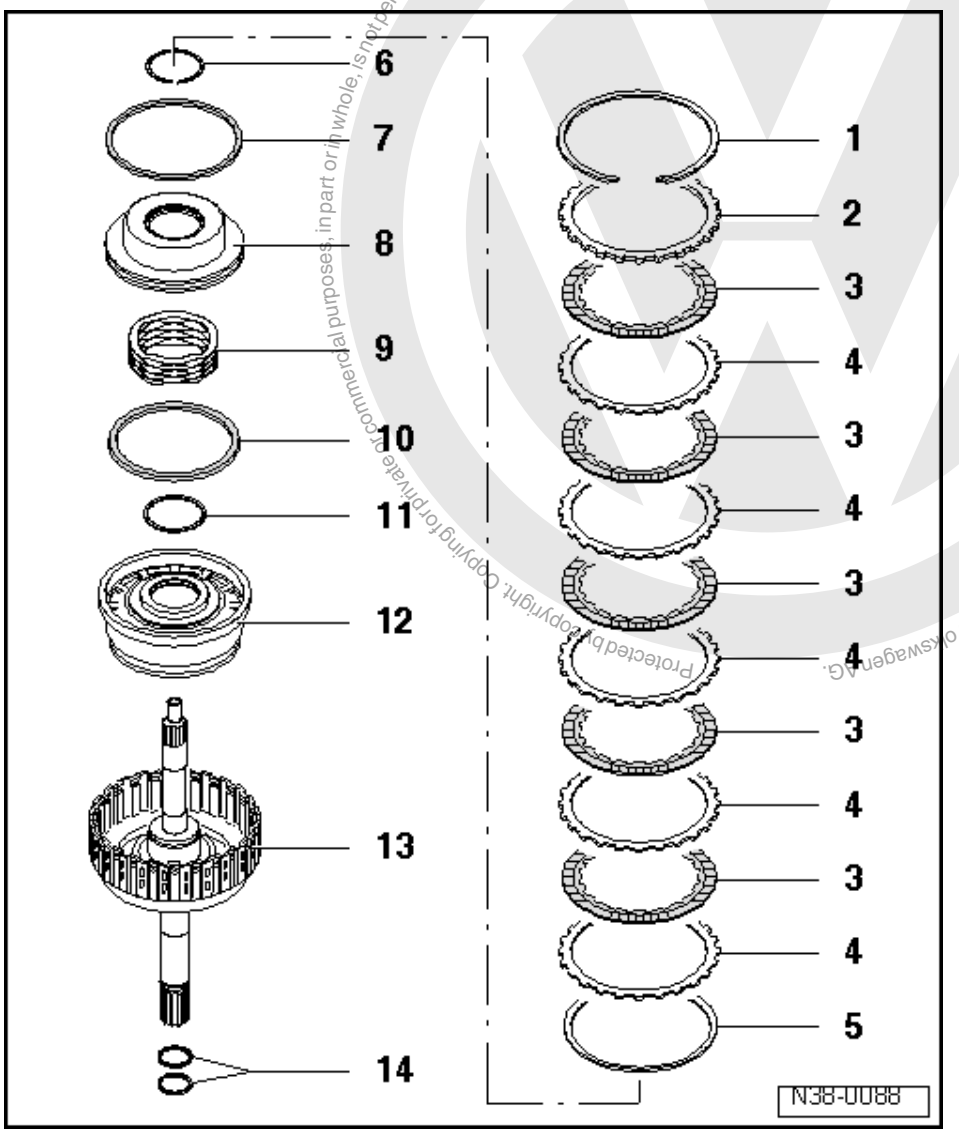

7 Oil seal
- Always renew

8 Piston cap
- Moisten sealing ring with ATF before installing

9 Spring
- Seat between piston and piston cap

10 Oil seal
- Always renew
- Sealing lip faces to clutch housing

11 Oil seal
- Always replace

12 Piston
- Spare part is allocated according to gearbox code letters
- Installing => Page 146

13 Clutch housing with turbine shaft

14 Piston ring
- Check that it is correctly located

satelettronica

- Do not overstretch

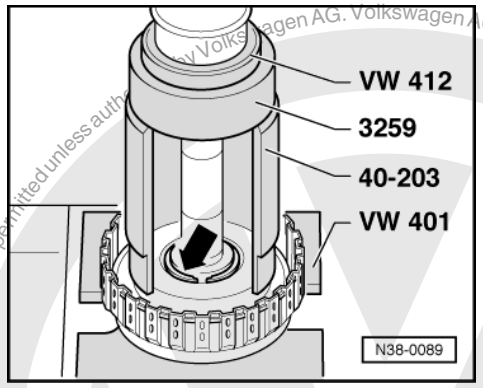

-> Fig.1 Removing and installing circlip

- Press piston cap and spring down far enough for the circlip (arrow) to be inserted in the groove.

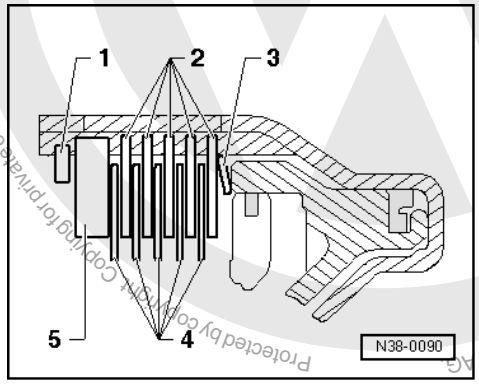

-> Fig.2 Installing outer and inner plates

Convex side of dished washer (small diameter) faces to clutch housing.

- Place outer plates -2- and inner plates -4- on the dished washer -3-.
- Place pressure plate -5- on the last inner plate.
- Fit circlip -1- in the groove in the clutch housing.

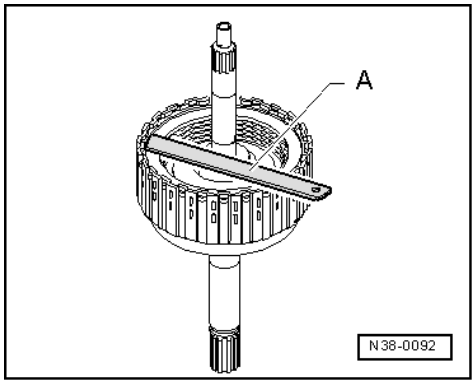

-> Fig.3 Determining thickness for the pressure plate.

- Measure play between pressure plate and circlip using a feeler gauge "A".

Copyright by Volkswagen AG. Volkswagen AG does not guarantee or accept any liability with respect to the correctness of information in this document. Copyright by Volkswagen AG. Protected by copyright. Copying for private or commercial purposes, in part or in whole, is not permitted unless authorised by Volkswagen AG.

satelettronica

Component	Installed dimension	Wear limit
Clutch K1	0.45 ... 0.85 mm	1.05 mm

- If the wear limit is reached on a used clutch, the plates must be replaced and the thickness for a new pressure plate must be calculated.
- Allocate plates and pressure plate according to gearbox code letters.

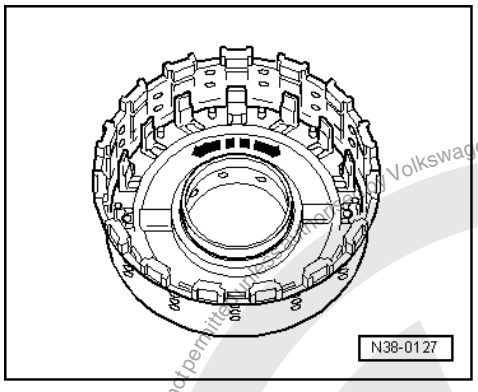

-> Fig.4 Functional check of clutch

- Before installing the piston moisten sealing lip and sealing rings with ATF.
- Turn piston slightly when installing.
- It must be possible to turn the piston by hand in both directions (arrows) after it has been installed into clutches or brakes.

◆ If this is not the case, the sealing lips or sealing rings may catch or become damaged.

- If this defect occurs, remove piston again.
- Check sealing lips or sealing rings for damage, renew if necessary.
- Install piston again and check.

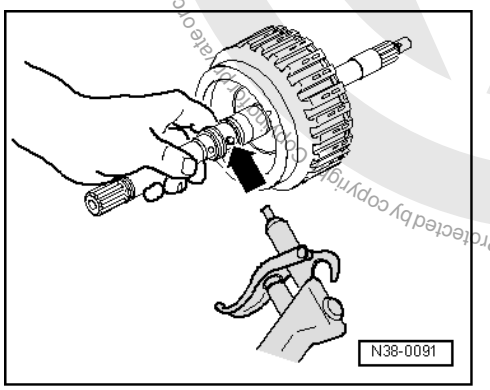

- -> Blow compressed air into the pressure channel -arrow-.
- Keep the drilling on the opposite side closed.
- The clutch piston must press the plates together.
- Allow compressed air to escape. The set of plates must return to its rest position.

Protected by copyright. Copyright by Volkswagen AG. Volkswagen AG does not guarantee or accept any liability with respect to the correctness of information in this document. Copyright by Volkswagen AG.
satelettronica

4 - Dismantling and assembling reverse gear clutch -K2-

4.1 - Dismantling and assembling reverse gear clutch -K2-

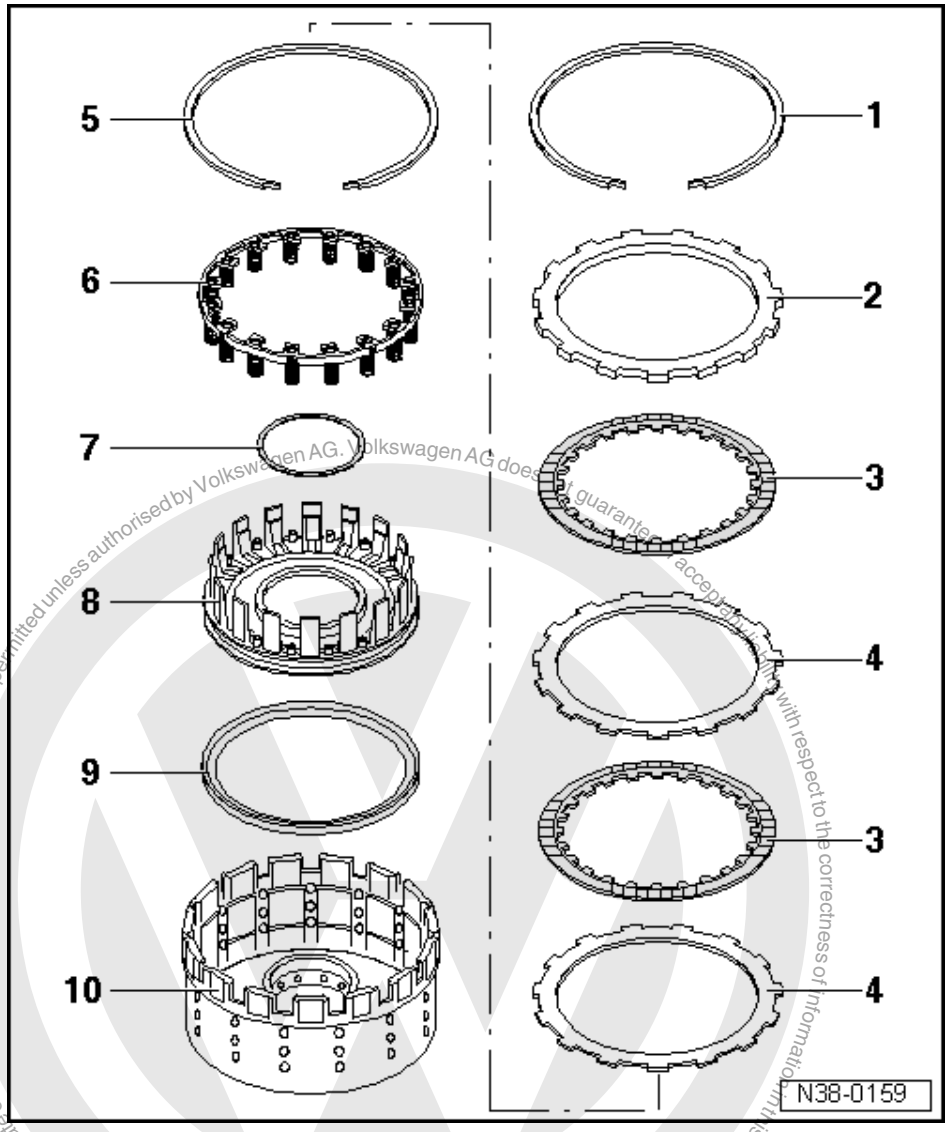

Functional check of clutch

=>Fig. 4

1 Circlip
- Mark after removing and insert in same position

2 Thrust plate
- Installing => Fig. 2
- Determining thickness => Fig. 3

3 Inner plate
- Installing => Fig. 2
- Quantity=> Page 3

4 Outer plate
- Installing => Fig. 2
- Quantity=> Page 3

5 Circlip
- Lever out with screwdriver

Protected by copyright. Copyright by Volkswagen AG. Volkswagen AG does not guarantee or accept any liability with respect to the correctness of information in this document. Copyright by Volkswagen AG. Reproduction in whole or in part for commercial purposes, is not permitted unless authorised by Volkswagen AG.
satelettronica

- Installing => Fig. 1

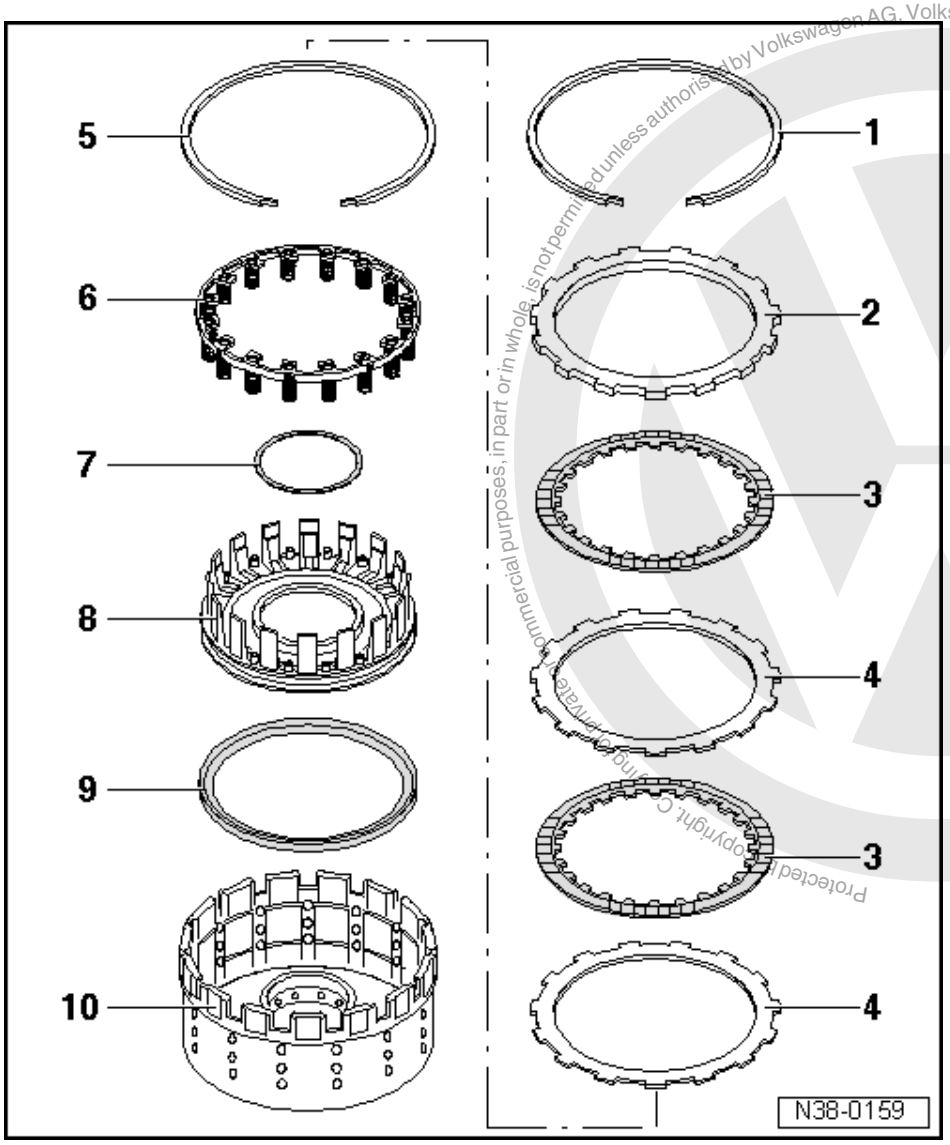

6 Spring supporting plate
- With springs
- Installing => Fig. 1

7 Oil seal
- Always renew

8 Piston
- Spare part is allocated according to gearbox code letters
- Installing => Page 150

9 Oil seal
- Always renew
- Sealing lip faces to clutch housing

10 Clutch housing

Protected by copyright. Copying for commercial purposes, in part or in whole, is not permitted unless authorised by Volkswagen AG. Volkswagen AG does not guarantee or accept any liability with respect to the correctness of information in this document. Copyright by Volkswagen AG.
satelettronica

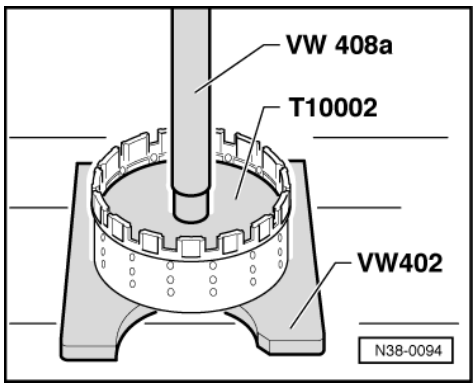

-> Fig.1 Removing and installing circlip

- Place spring supporting plate on the piston of the -K2- clutch.
- Place circlip on spring supporting plate.
- Carefully press down circlip with spring supporting plate using press piece T 10002 until the circlip audibly locates in the groove.

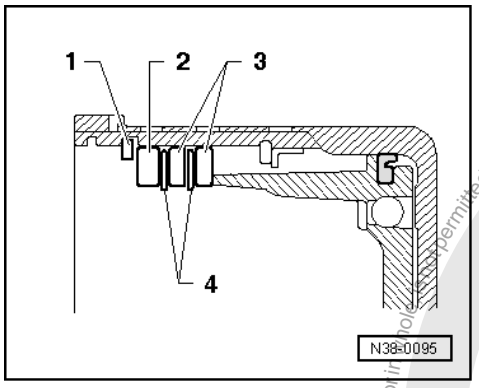

-> Fig.2 Installing outer and inner plates

The sealing lip of sealing ring faces to clutch housing.

- Install outer plates -3- and inner plates -4- in clutch housing.
- Place pressure plate -2- on the last inner plate.
- Fit circlip -1- in the groove in the clutch housing.

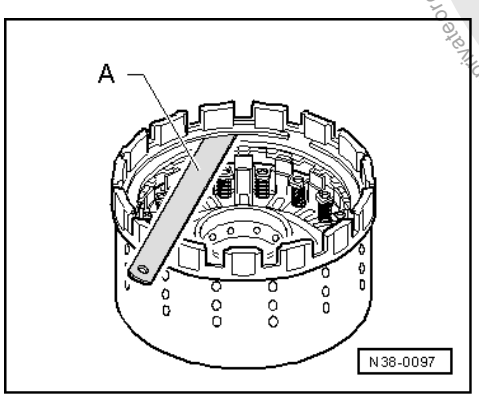

-> Fig.3 Determining thickness for the pressure plate.

- Measure play between pressure plate and circlip using a feeler gauge "A".

Protected by copyright. Copying for private or commercial purposes, in part or in whole, is not permitted unless authorised by Volkswagen AG. Volkswagen AG does not guarantee or accept any liability with respect to the correctness of information in this document. Copyright by Volkswagen AG.
satelettronica

Component	Installed dimen.	Wear limit
Clutch K2	0.5 ... 0.8 mm	1.0 mm

- If the wear limit is reached on a used clutch, the plates must be replaced and the thickness for a new pressure plate must be calculated.
- Allocate plates and pressure plate according to gearbox code letters.

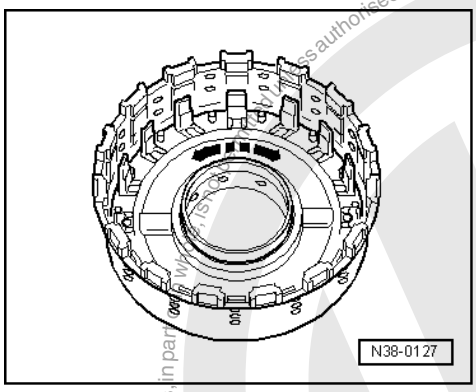

-> Fig.4 Functional check of clutch

- Before installing the piston moisten the sealing lips and sealing rings with ATF.

Sealing lip faces to clutch housing.

- Turn piston slightly when installing.
- It must be possible to turn the piston by hand in both directions (arrows) after it has been installed into clutches or brakes.

◆ If this is not the case, the sealing lips or sealing rings may catch or become damaged.

- If this defect occurs, remove piston again.
- Check sealing lips or sealing rings for damage, renew if necessary.
- Install piston again and check.

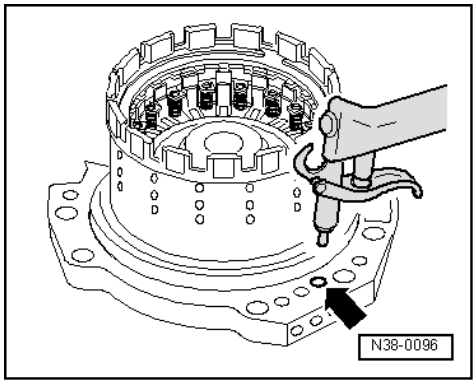

- Place shim between -K2- clutch and ATF pump.
- Place clutch -K2- on ATF pump and press downwards.
- -> Blow compressed air into the pressure channel -arrow-.
- The clutch piston must press the plates together.
- Allow compressed air to escape. The set of plates must return to its rest position.

satelettronica

5 - Dismantling and assembling 3rd and 4th gear clutch -K3-

5.1 - Dismantling and assembling 3rd and 4th gear clutch -K3-

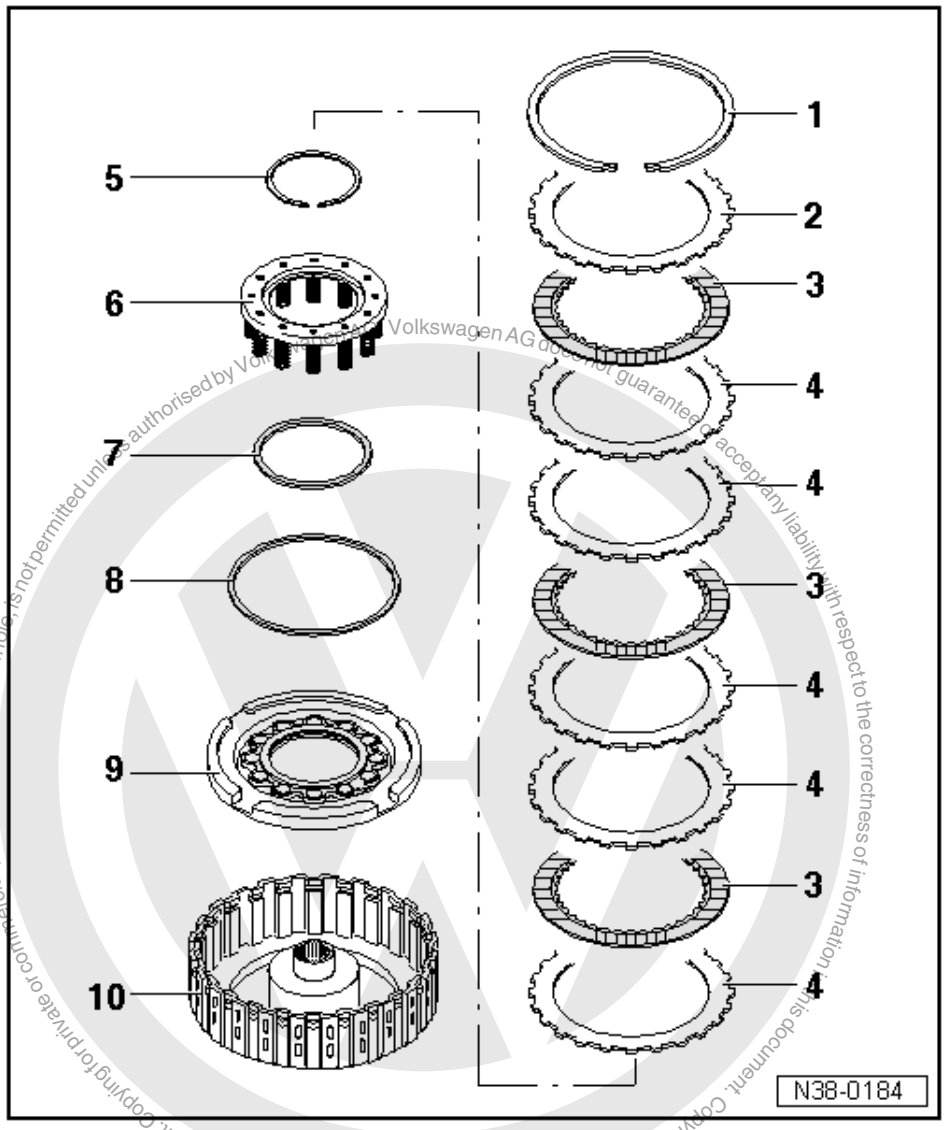

Take note of number of plates and location during dismantling stage => figure 2 .

Functional check of clutch

=>Fig. 5

1 Circlip
- Lever out with screwdriver

2 Thrust plate
- Installing => Fig. 3
- Determining thickness => Fig. 4

3 Inner plate
- Installing => Fig. 3
- Quantity=>Page 3

4 Outer plate
- Installing => Fig. 3

satelettronica

- Quantity=>Page 3

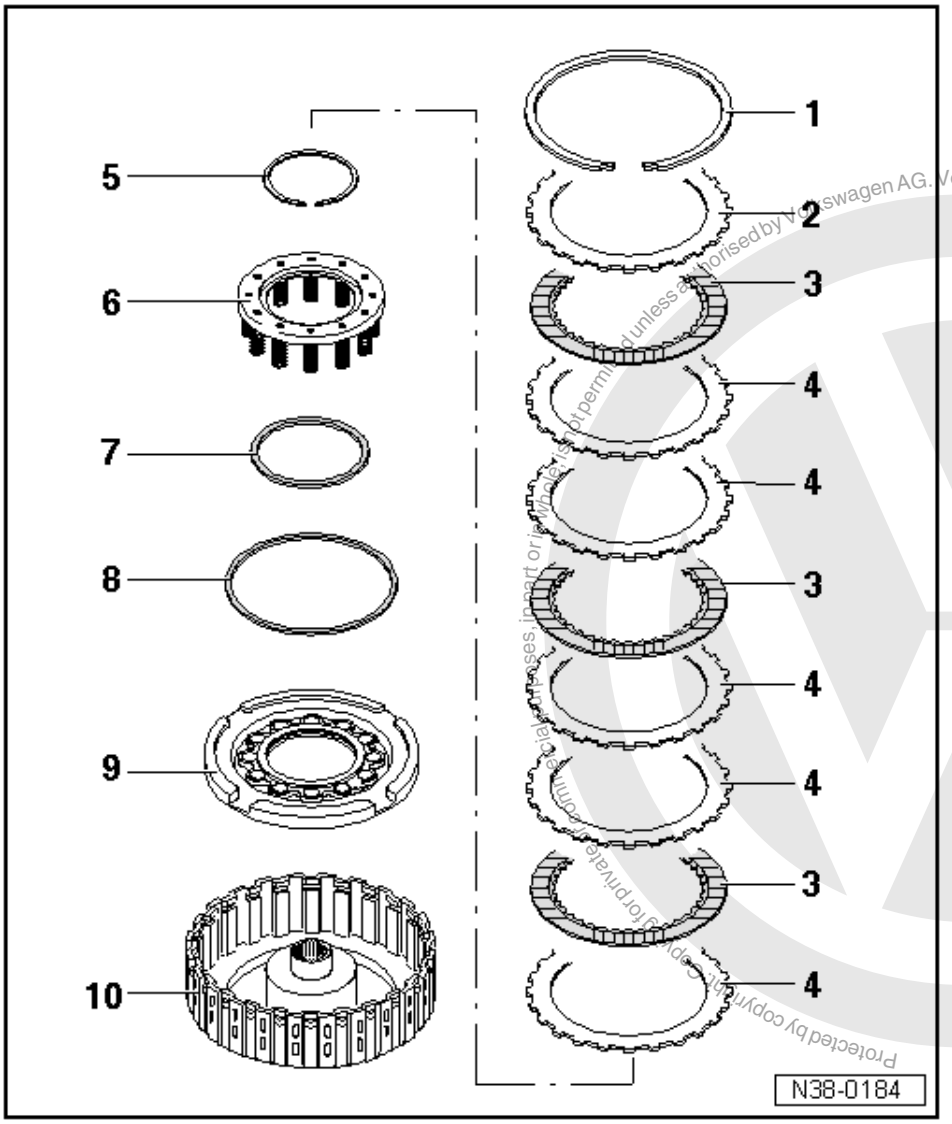

5 Securing ring
- Removing and installing => Fig. 1

6 Spring supporting plate
- With springs

7 Oil seal
- Always replace

8 Oil seal
- Always renew

9 Piston
- Spare part is allocated according to gearbox code letters
- Installing => Page 154

10 Clutch housing

Protected by copyright. Copying for private or commercial purposes, in part or in whole, is not permitted unless authorised by Volkswagen AG. Volkswagen AG does not guarantee or accept any liability with respect to the correctness of information in this document. Copyright by Volkswagen AG.
satelettronica

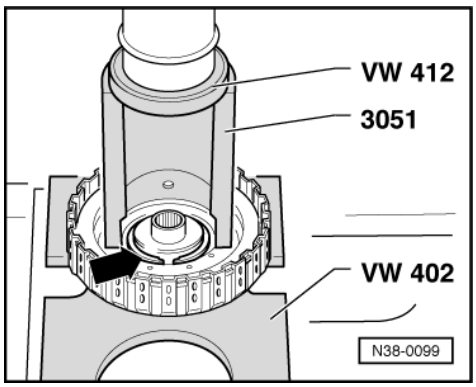

-> Fig.1 Removing and installing circlip (arrow)

- Press down carefully on piston cap until the circlip an be installed.

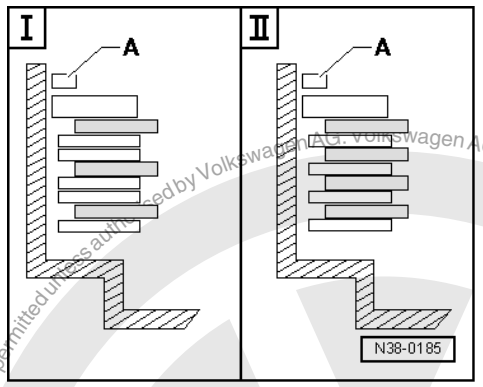

-> Fig.2 Observe different number and location of plates

I - -K3- with 3 inner plates

II - -K3- with 4 inner plates

A - Circlip

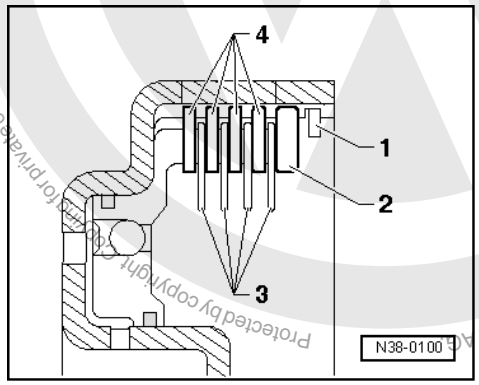

-> Fig.3 Installing outer and inner plates

- Install outer plates -4- and inner plates -3- in clutch housing.
- Place pressure plate -2- on the last inner plate.

Protected by copyright. Copying for private or commercial purposes, in part or in whole, is not permitted unless authorised by Volkswagen AG. Volkswagen AG does not guarantee or accept any liability with respect to the correctness of information in this document. Copyright by Volkswagen AG.
satelettronica

- Insert circlip -1- in the groove in the clutch housing.

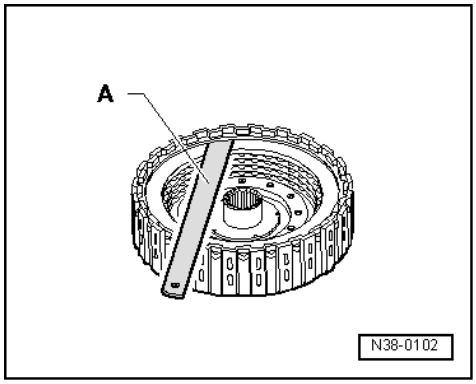

-> Fig.4 Determining thickness for the pressure plate.

- Measure play between pressure plate and circlip using a feeler gauge "A".

Component	Installed dimen.	Wear limit
Clutch K3	1.8 ... 2.2 mm	2.4 mm

- If the wear limit is reached on a used clutch, the plates must be replaced and the thickness for anew pressure plate must be calculated.
- Allocate plates and pressure plate according to gearbox code letters.

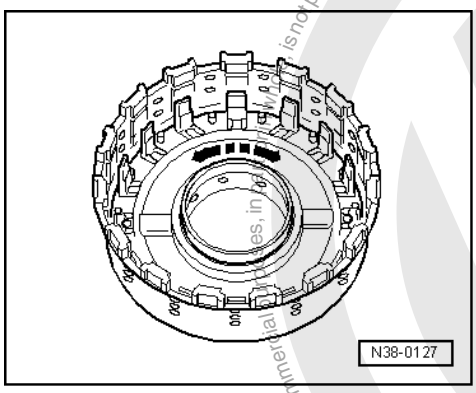

-> Fig.5 Functional check of clutch

- Before installing the piston moisten sealing lips and sealing rings with ATF.
- Turn piston slightly when installing.
- It must be possible to turn the piston by hand in both directions (arrows) after it has been installed into clutches or brakes.

◆ If this is not the case, the sealing lips or sealing rings may catch or become damaged.

- If this defect occurs, remove piston again.
- Check sealing lips or sealing rings for damage, renew if necessary.

Volkswagen AG. Volkswagen AG does not guarantee or accept any liability with respect to the correctness of information in this document. Copyright by Volkswagen AG.
Protected by copyright. Copying for private or commercial purposes, in part or in whole, is not permitted unless authorised by Volkswagen AG.
satelettronica

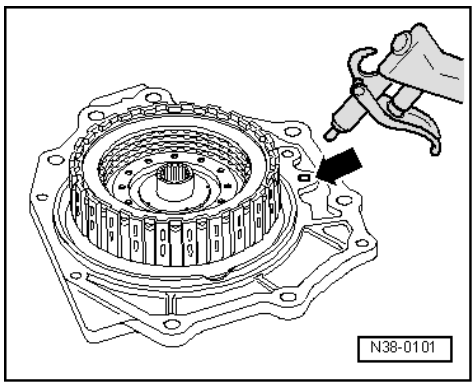

- Install piston again and check.
- Place clutch -K3- on gearbox housing cover and press downwards.
- -> Blow compressed air into the pressure channel -arrow-.
- The clutch piston must press the plates together.
- Allow compressed air to escape. The set of plates must return to its rest position.

Protected by copyright. Copying for private or commercial purposes, in part or in whole, is not permitted unless authorised by Volkswagen AG. Volkswagen AG does not guarantee or accept any liability with respect to the correctness of information in this document. Copyright by Volkswagen AG.

satelettronica

6 - Dismantling and assembling reverse gear brake

6.1 - Dismantling and assembling reverse gear brake

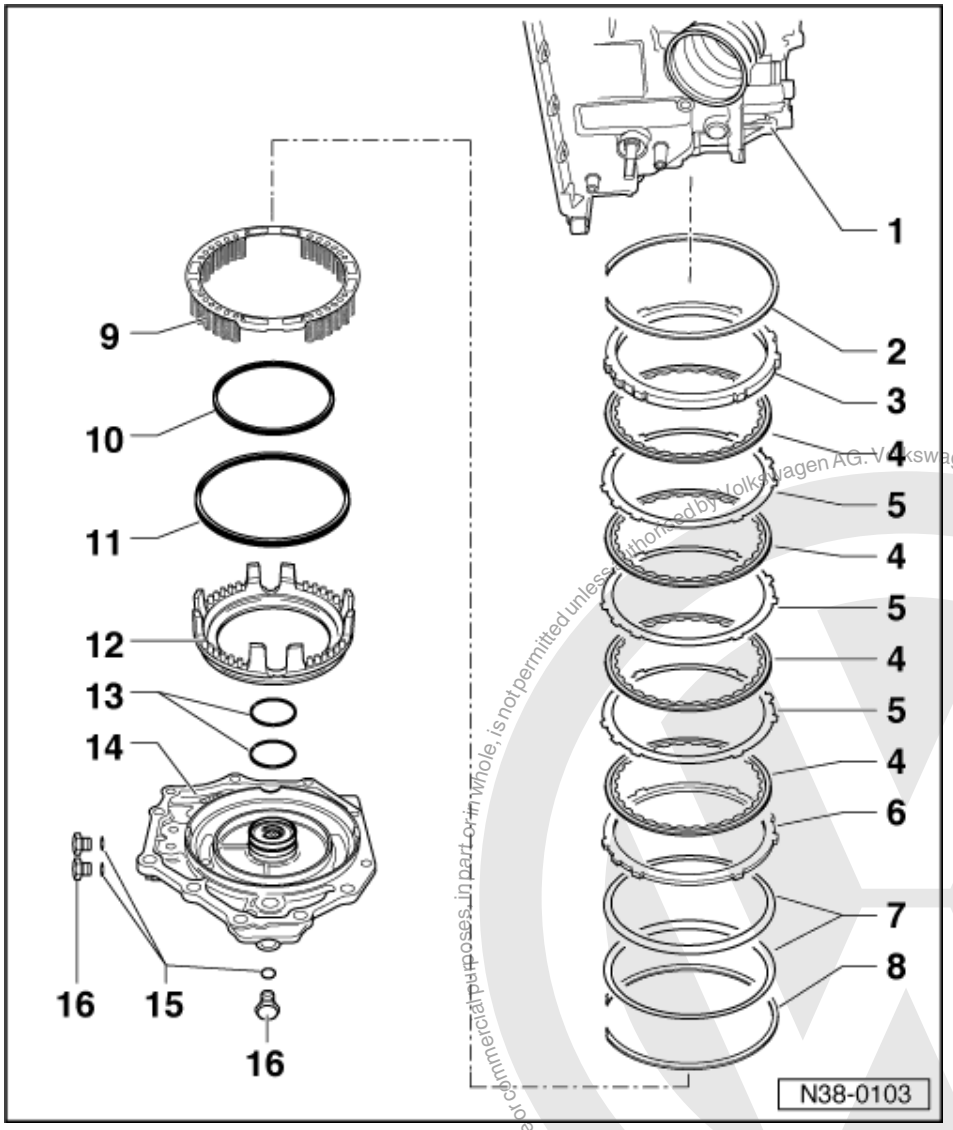

6.2 - Dismantling and assembling reverse gear brake -B1-

1 Gearbox housing
2 Circlip
- Lever out with screwdriver

3 Thrust plate
- Determining thickness => Page 125
- Installing => Fig. 3

4 Inner plate -B1-
- Quantity=> Page 3

5 Outer plate -B1-
- Quantity=> Page 3

6 Pressure plate

Protected by copyright. Copying for private or commercial purposes, in part or in whole, is not permitted unless authorised by Volkswagen AG. Volkswagen AG does not guarantee or accept any liability with respect to the correctness of information in this document. Copyright by Volkswagen AG.
satelettronica

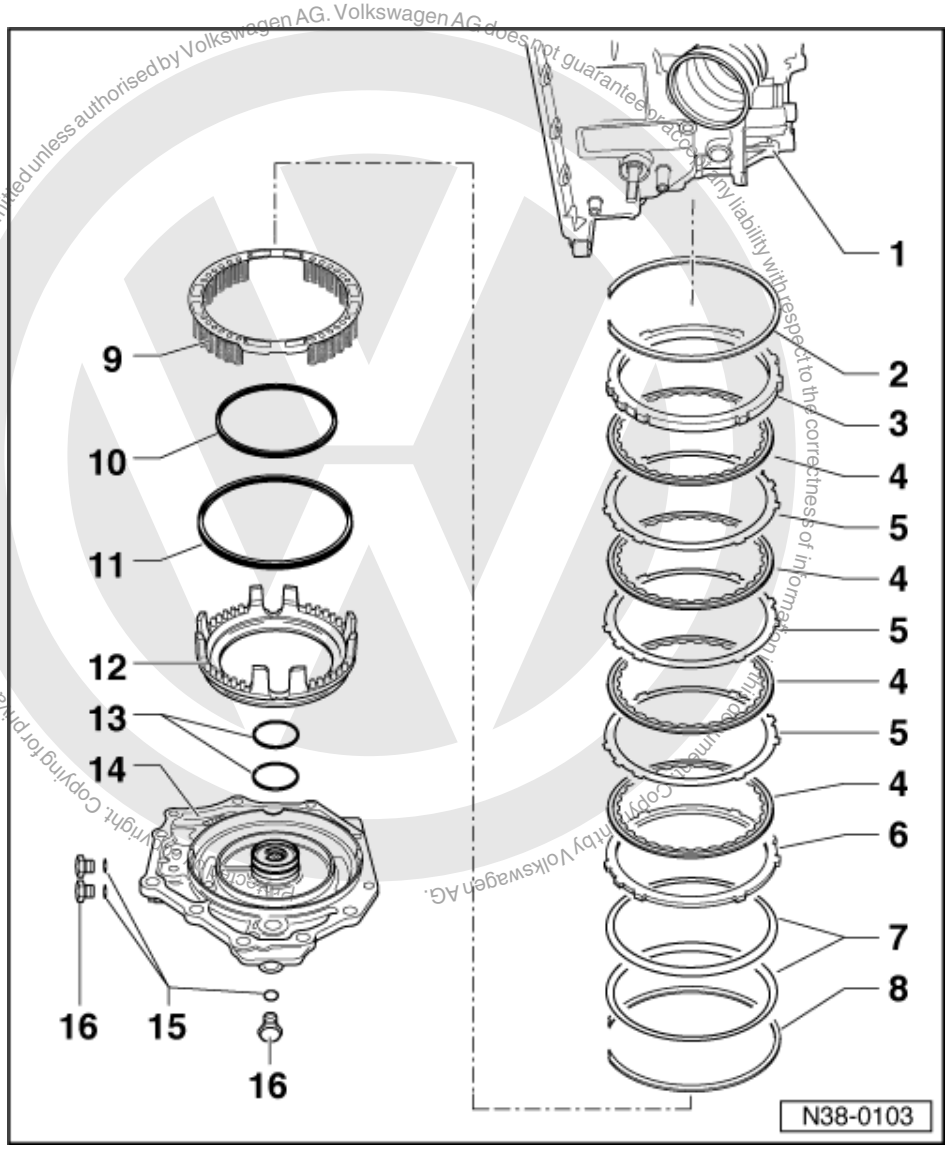

7 Dished spring
- Note installation position: Larger diameters face one another => Fig. 3

8 Circlip
- Lever out with screwdriver

9 Spring supporting plate
- With springs
- Press onto the piston -item 12 -
  => Fig. 2

10 Oil seal
- Always renew

11 Oil seal
- Always renew

satelettronica

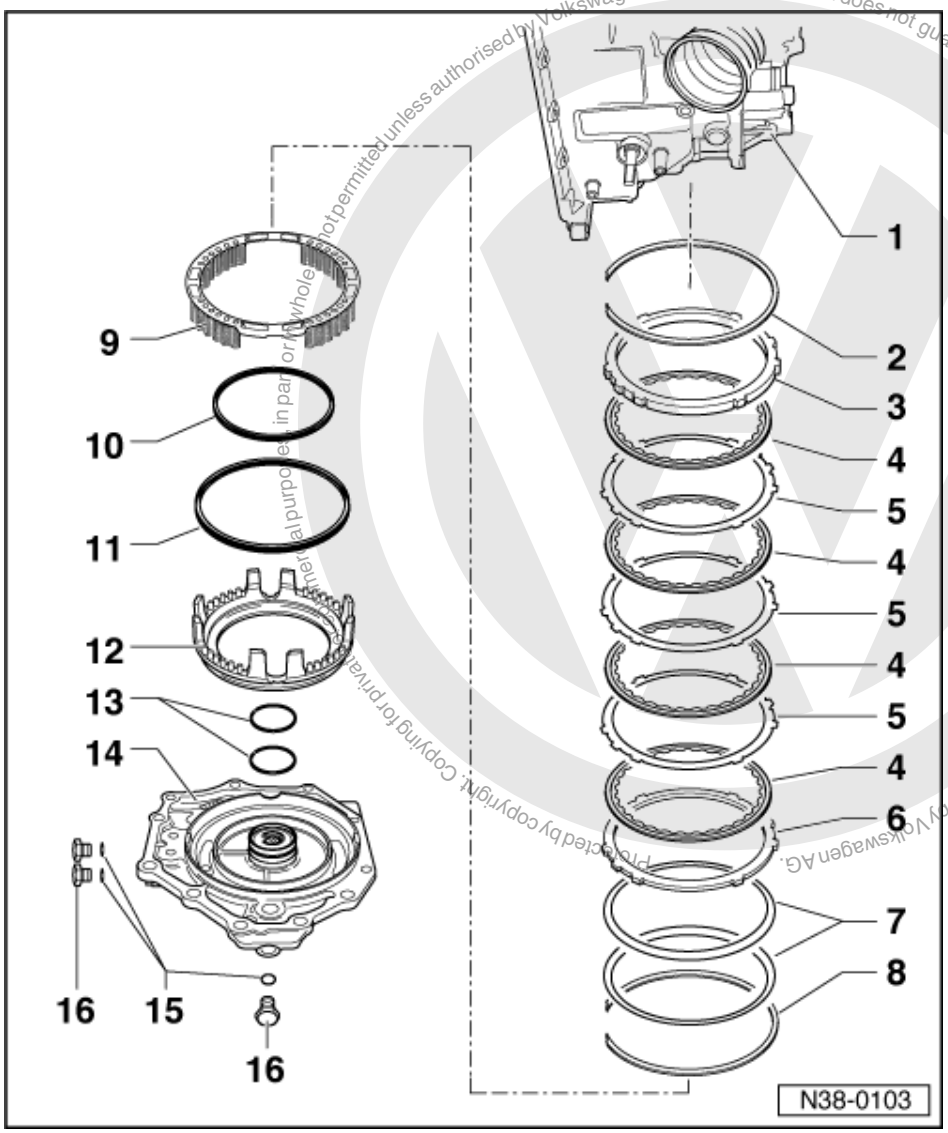

12 Piston -B1-

- Differs depending upon type of engine fitted
- Spare part is allocated according to gearbox code letters
- Installing =>Fig. 1
- Moisten sealing rings with ATF before installing

13 Piston ring

- Check that it is correctly located
- Do not overstretch

14 Gearbox housing cover

15 O-ring

- Always renew

16 Sealing plug

Protected by copyright. Copying for private or commercial purposes, in part or in whole, is not permitted unless authorised by Volkswagen AG. Volkswagen AG does not guarantee or accept any liability with respect to the correctness of information in this document. Copyright by Volkswagen AG.

satelettronica

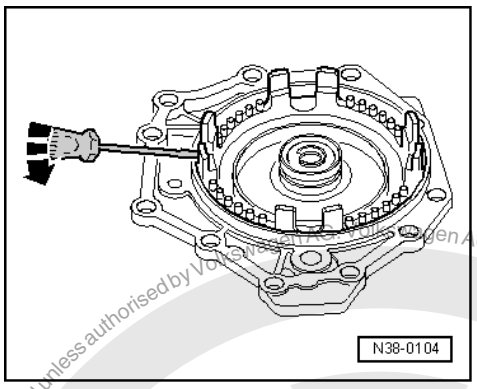

-> Fig.1 Removing piston -B1-.

- Lever out of gearbox housing cover diagonally with a screwdriver.

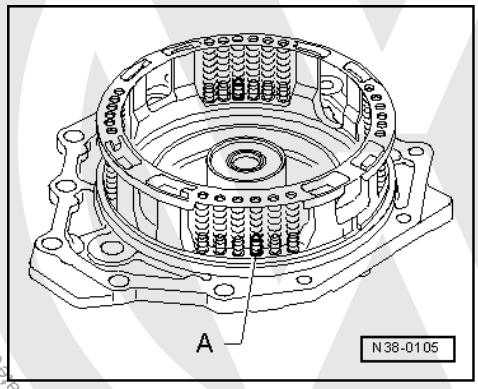

-> Fig.2 Placing spring supporting plate on piston -B1-

- Press spring cage onto the guide lugs of the piston -B1-.

There are four guide pins -A- which are thicker and hold the spring cage in place.

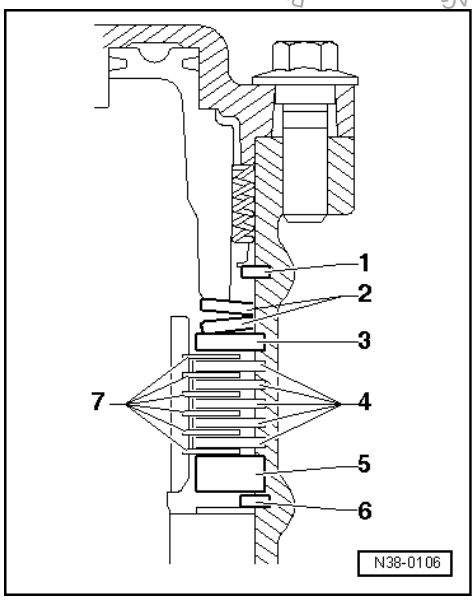

Protected copyright. Copyright by Volkswagen AG.
Private or commercial purposes, in part or in whole, is not permitted unless authorised by Volkswagen AG does not guarantee or accept any liability with respect to the correctness of information in this document.
satelettronica

-> Fig.3 Installing outer and inner plates
- Place pressure plate -5- on circlip -6-, which holds the free-wheel in position.
- Place outer plates -4- and inner plates -7- in gearbox housing.
- Place thrust washer -3- on the last inner plate.
- Install dished washers -2- in correct installation position, larger diameters facing one another.
- Insert circlip -1- in the groove in the gearbox housing.

7 - Dismantling and assembling piston for 2nd and 4th gear brake -B2-

7.1 - Dismantling and assembling piston for 2nd and 4th gear brake -B2-

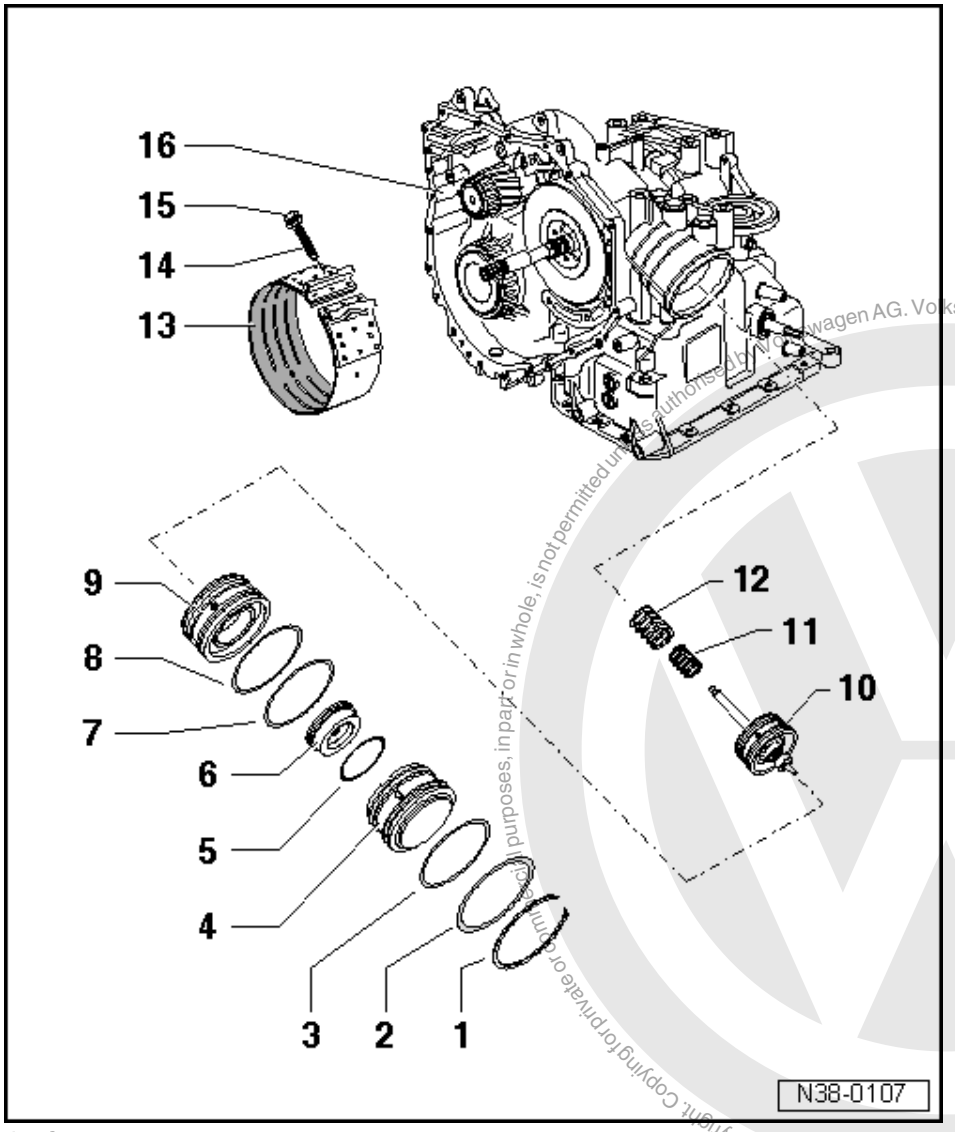

1 Circlip
- Removing and installing =>Fig. 1

2 O-ring
- Always renew

3 O-ring
- Always renew

4 Cover
- Pull out of gearbox housing after removing circlip

5 O-ring

Protected by copyright. Copying for private or commercial purposes, in part or in whole, is not permitted unless authorised by Volkswagen AG. Volkswagen AG does not guarantee or accept any liability with respect to the correctness of information in this document. Copyright by Volkswagen AG.
satelettronica

- Always renew

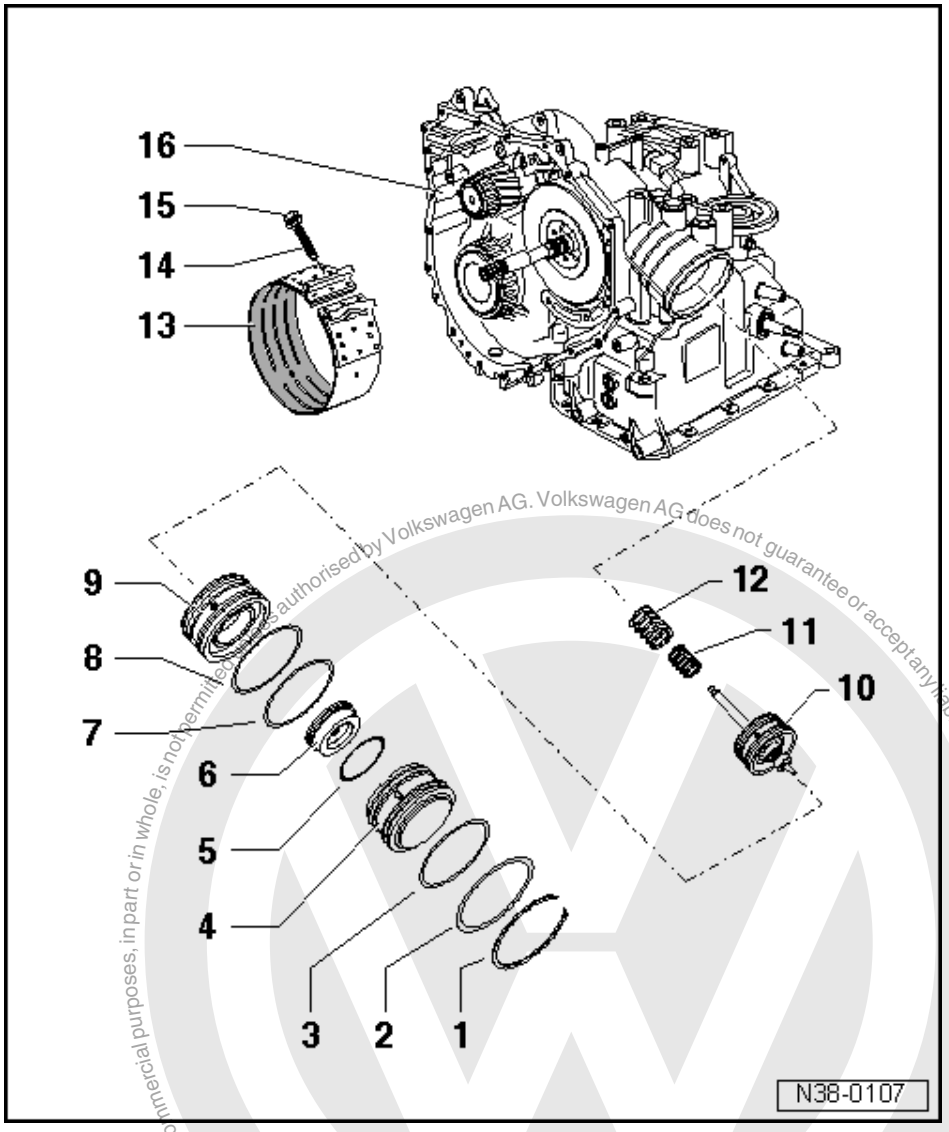

6 4th gear operating piston
- Differs depending upon type of engine
- Spare part is allocated according to gearbox code letters

7 O-ring
- Always renew

8 O-ring
- Always renew

9 Piston cap
- For 2nd gear operating piston
- Differs depending upon type of engine
- Spare part is allocated according to gearbox code letters

10 2nd gear operating piston
- Differs depending upon type of engine
- Spare part is allocated according to gearbox code letters

Protected by copyright. Copying for commercial purposes, in part or in whole, is not permitted unless authorised by Volkswagen AG. Volkswagen AG does not guarantee or accept any liability with respect to the correctness of information in this document. Copyright by Volkswagen AG.
satelettronica

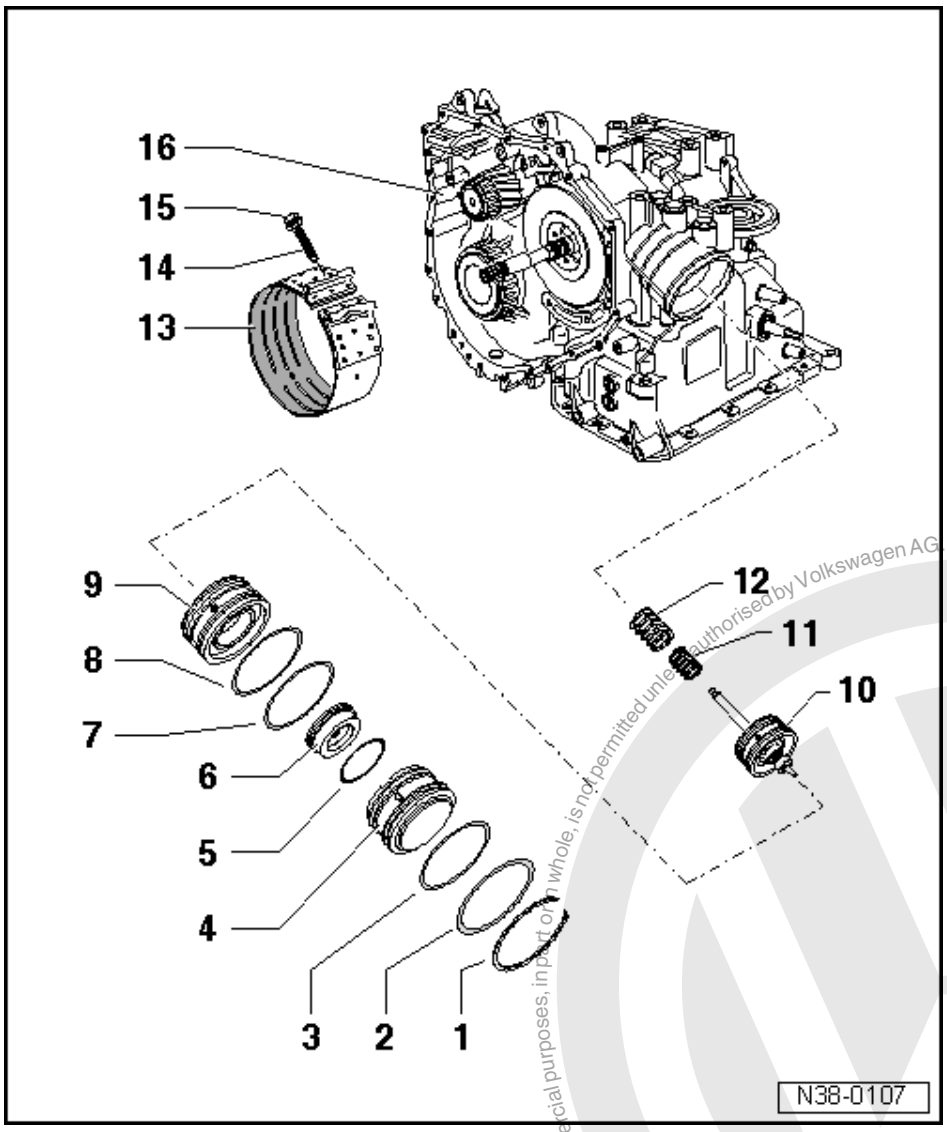

11 Spring
12 Spring
13 Brake band -B2-
- Store in installation position => Fig. 2

14 Shim
- For brake band -B2-

15 Nut, 45 Nm
16 Gearbox housing

Protected by copyright. Copying for private or commercial purposes, in part or in whole, is not permitted unless authorised by Volkswagen AG. Volkswagen AG does not guarantee or accept any liability with respect to the correctness of information in this document. Copyright by Volkswagen AG.
satelettronica

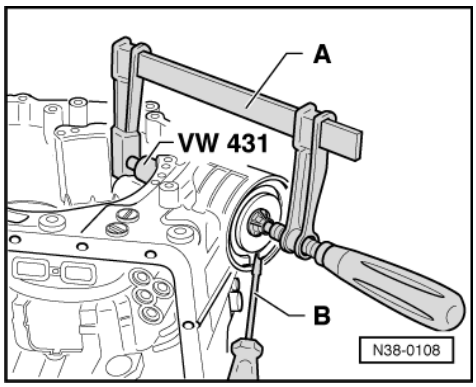

-> Fig.1 Removing and installing circlip

- Place thrust piece VW 431 over the cylinder for the -B2- brake operating piston.
- Depress cap slightly with a screw-type clamp -A-.
- Lever circlip out with a screwdriver -B-.

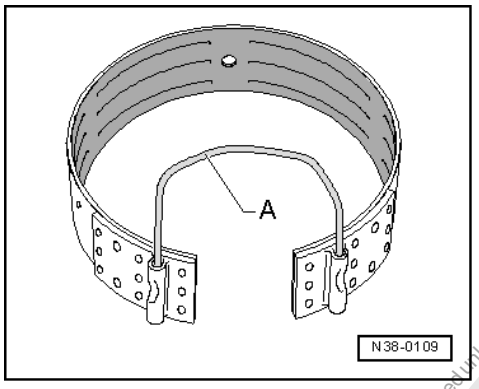

-> Fig.2 Storing brake band -B2-

- After removing brake band, secure against opening out with e.g. a locally manufactured wire hoop -A-.

Protected by copyright. Copying for private or commercial purposes, in part or in whole, not permitted unless authorised by Volkswagen AG. Volkswagen AG does not guarantee or accept any liability with respect to the correctness of information in this document. Copyright by Volkswagen AG.
satelettronica

8 - Removing and installing valve chest

8.1 - Removing and installing valve chest

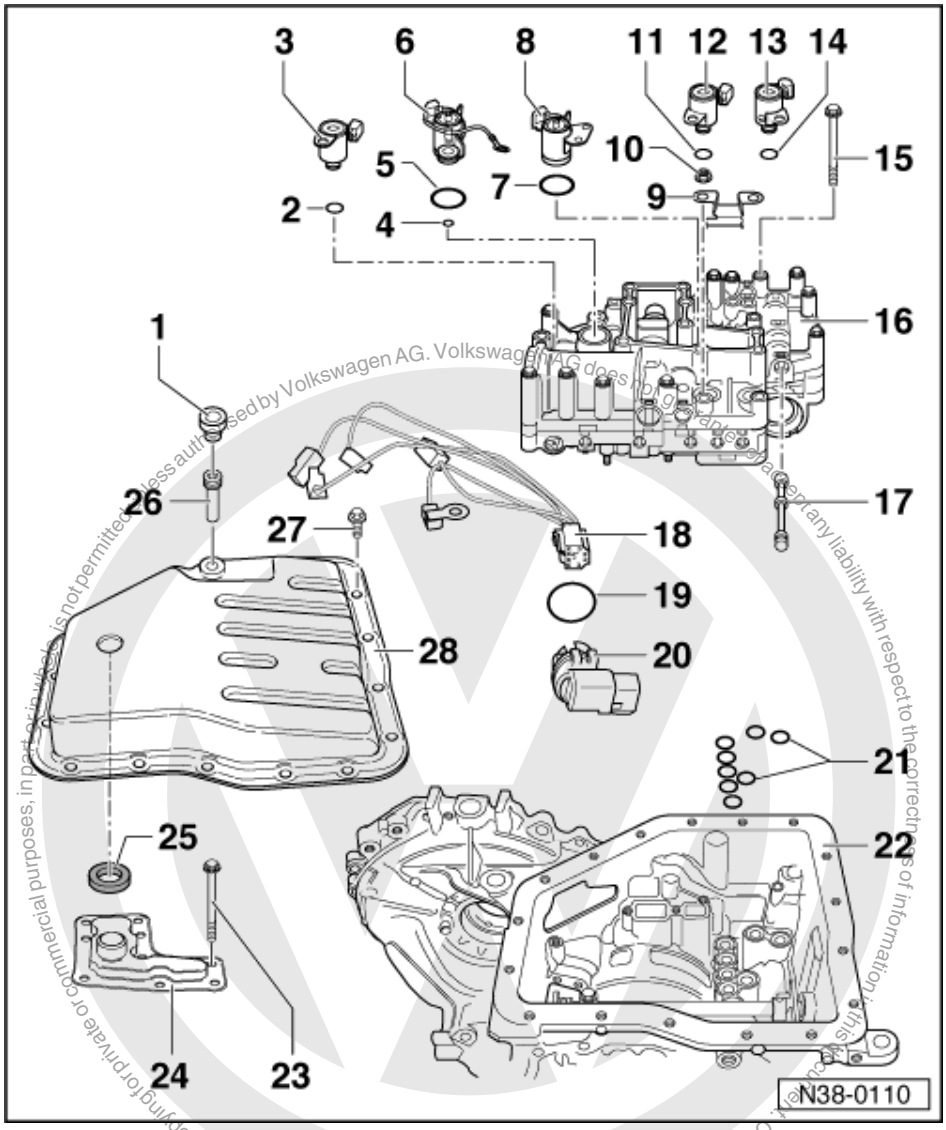

Sequence => from page 86 , Dismantling and assembling planetary gearbox

Warning!
Do not run engine or tow vehicle with oil pan removed or when there is no ATF in gearbox.

- The valve chest or the conductor strip can also be removed when the gearbox is installed.
- The solenoid valves can be renewed individually.
- Use only lint-free cloths.
- After re-installing the oil pan, fill with ATF => Page 76 .

satelettronica

8.2 - Vehicles up to 06.99

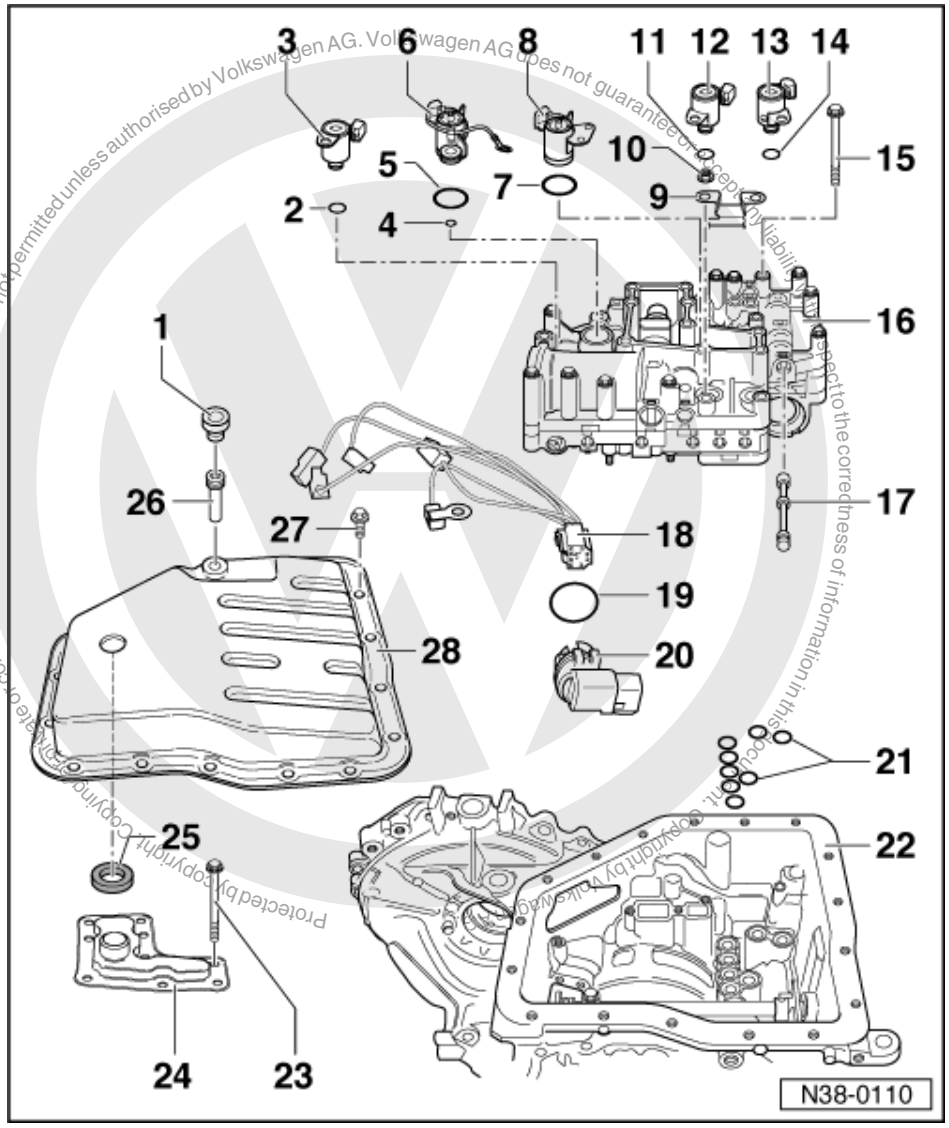

Protected by copyright. Copying for private or commercial purposes, in part or in whole, is not permitted unless authorised by Volkswagen AG. Volkswagen AG does not guarantee or accept any liability with respect to the correctness of information in this document. Copyright by Volkswagen AG.

Vehicles from 07.99 => page 170

1 Plug, 15 Nm
- Always renew seal =>Fig. 1
- Checking ATF level and topping-up => Page 76

2 O-ring
- Always renew

3 Solenoid valve 3 -N90-
- Grey

4 O-ring
- Always renew

5 O-ring
- Always renew

6 Solenoid valve 6 -N93-
- Pink

7 O-ring
- Always renew

8 Solenoid valve 4 -N91-

satelettronica

- Blue

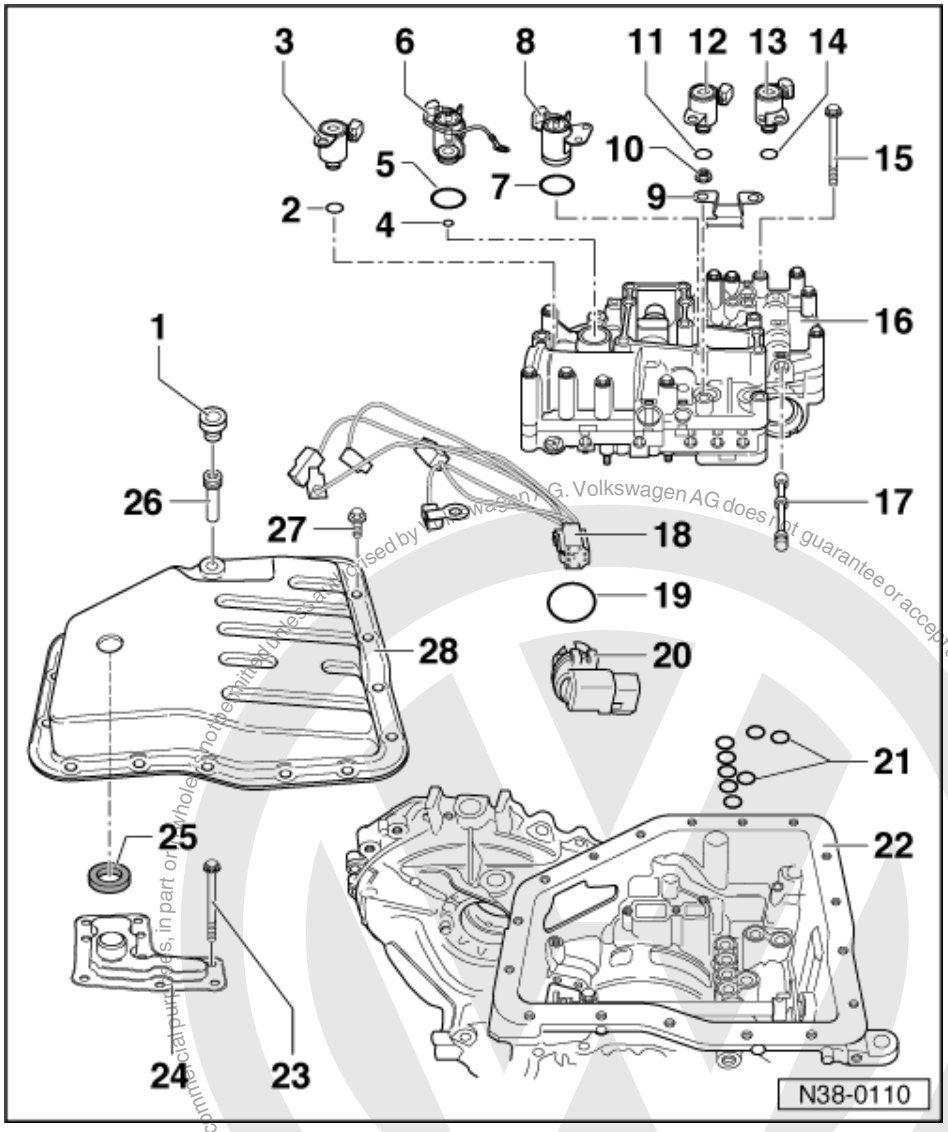

9 Retainer
- For solenoid valves

10 Nut, 9 Nm

11 O-ring

12 Solenoid valve 2 -N89-
- Yellow

13 Solenoid valve 1 -N88-
- Green

14 O-ring
- Always renew

15 Bolt, 8 Nm

16 Valve chest
- Removing and installing
  => from page 97
- Marking =>Fig. 2

Protected by copyright. Copying for private or commercial purposes, in part or in whole, is not permitted unless authorised by Volkswagen AG. Volkswagen AG does not guarantee or accept any liability with respect to the correctness of information in this document. Copyright by Volkswagen AG.
satelettronica

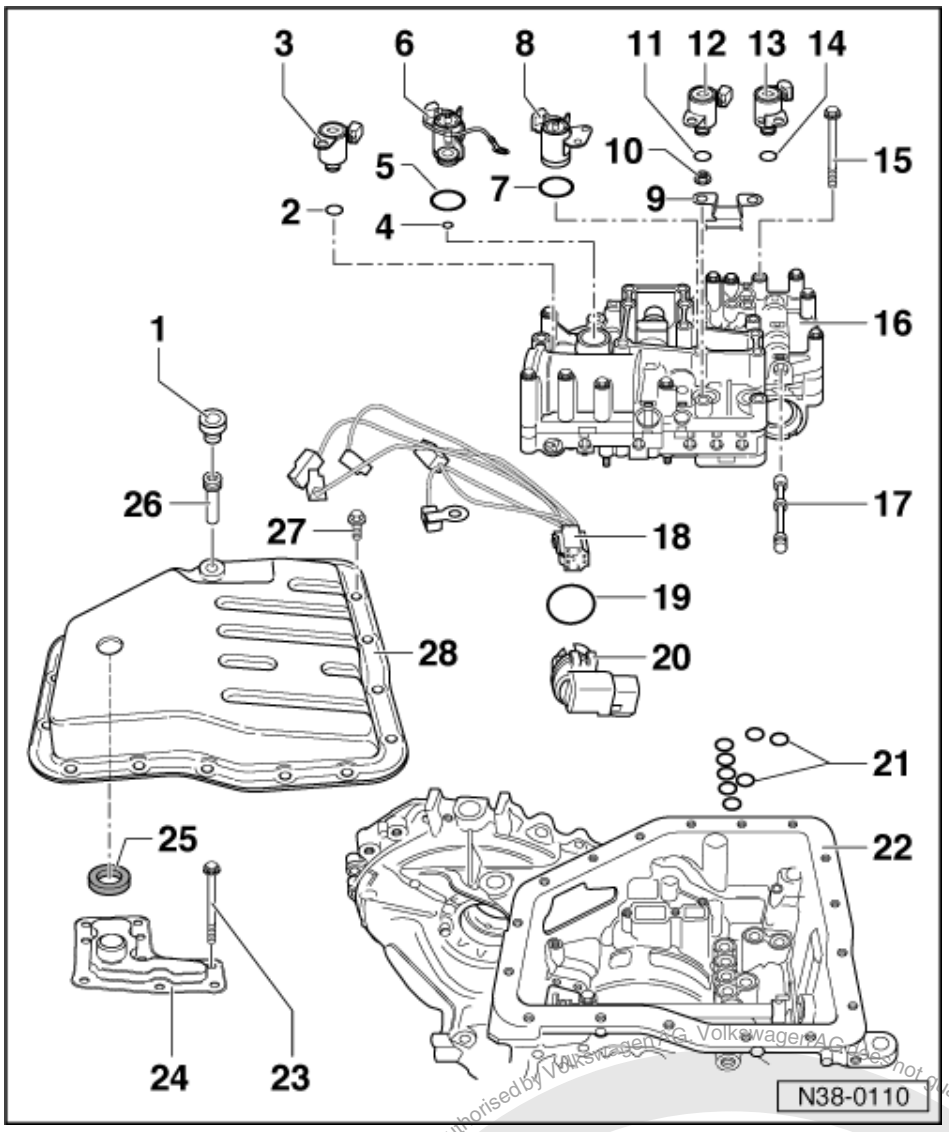

17 Spool valve
- Secure against falling out when removing the valve chest

18 Wiring harness
- For solenoid valves

19 O-ring
- Always renew
- For connector/wiring harness

20 Connector
- For wiring harness
- Removing => from Page 99
- When installing, ensure that it is in gearbox housing

21 O-ring
- Always renew
- Removing and installing
  => from Page 99

satelettronica
Protected by copyright. Copying for private or commercial purposes, in part or in whole, is not permitted unless authorised by Volkswagen AG. Volkswagen AG does not guarantee or accept any liability with respect to the correctness of information in this document. Copyright by Volkswagen AG.

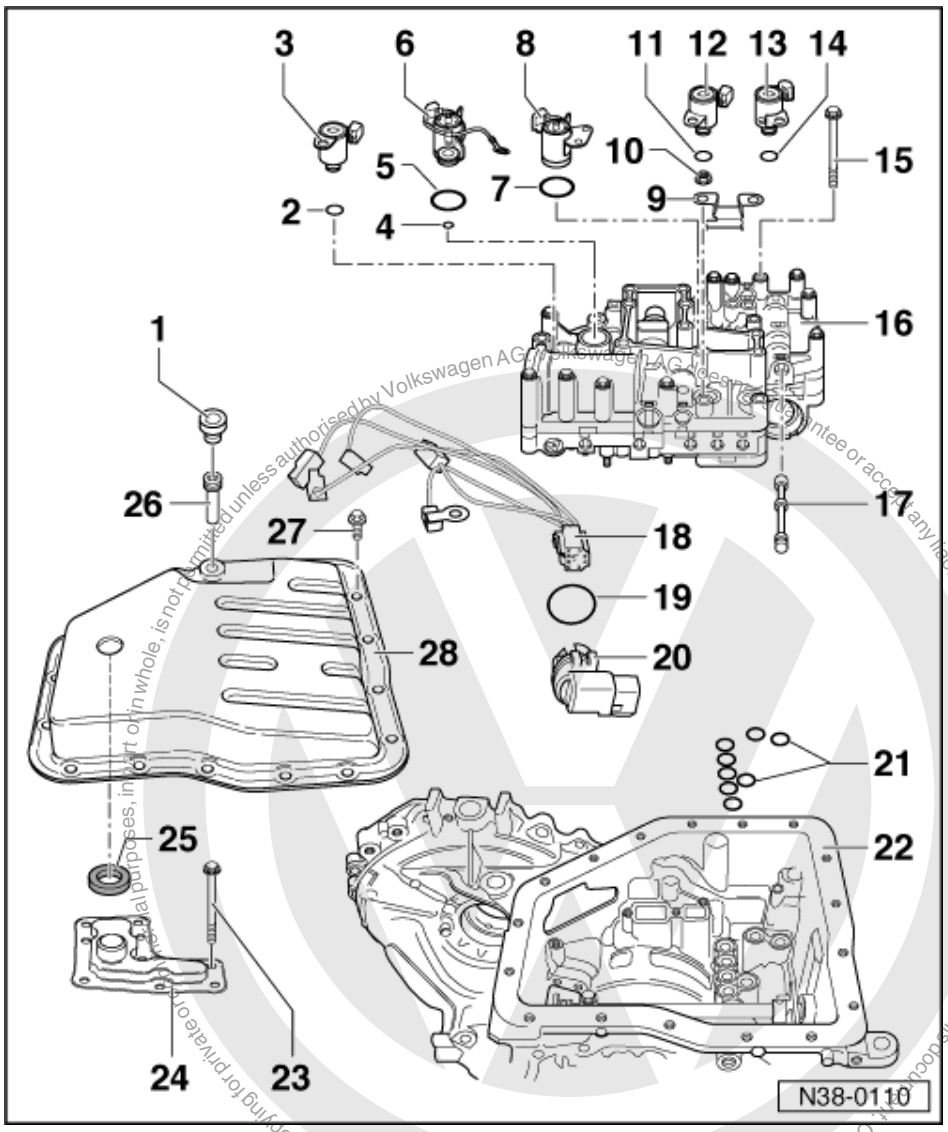

22 Gearbox housing
23 Bolt, 9 Nm
24 ATF screen
- To renew: remove and install oil pan

25 Magnet
- Place the support in the oil pan

26 Overflow pipe
- Remove when draining ATF
  => Page 86

27 Bolt, 8 Nm
28 Oil pan

Sequence => from page 86 , Dismantling and assembling planetary gearbox

Protected by copyright. Copying for private or commercial purposes, in part or in whole, is not permitted unless authorised by Volkswagen AG. Volkswagen AG does not guarantee or accept any liability with respect to the correctness of information in this document. Copyright by Volkswagen AG.
satelettronica

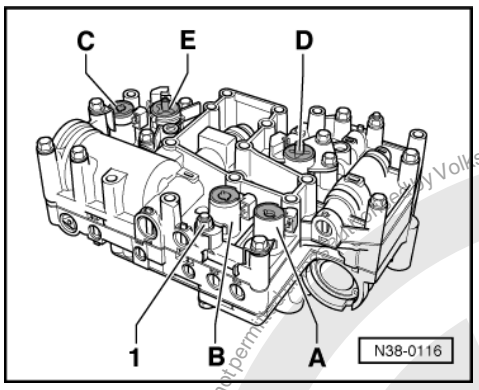

Solenoid valves up to 06.99:

A - Solenoid valve N88 (green)
B - Solenoid valve N89 (yellow)
C - Solenoid valve N90 (grey)
D - Solenoid valve N91 (blue)
E - Solenoid valve N93 (pink)
1 - Torque setting => from page 166 , 10 -Nut

Protected by copyright. Copying for private or commercial purposes, in whole or in part, is not permitted unless authorised by Volkswagen AG. Volkswagen AG does not guarantee or accept any liability with respect to the correctness of information in this document. Copyright by Volkswagen AG.
satelettronica

8.3 - Vehicles from 07.99

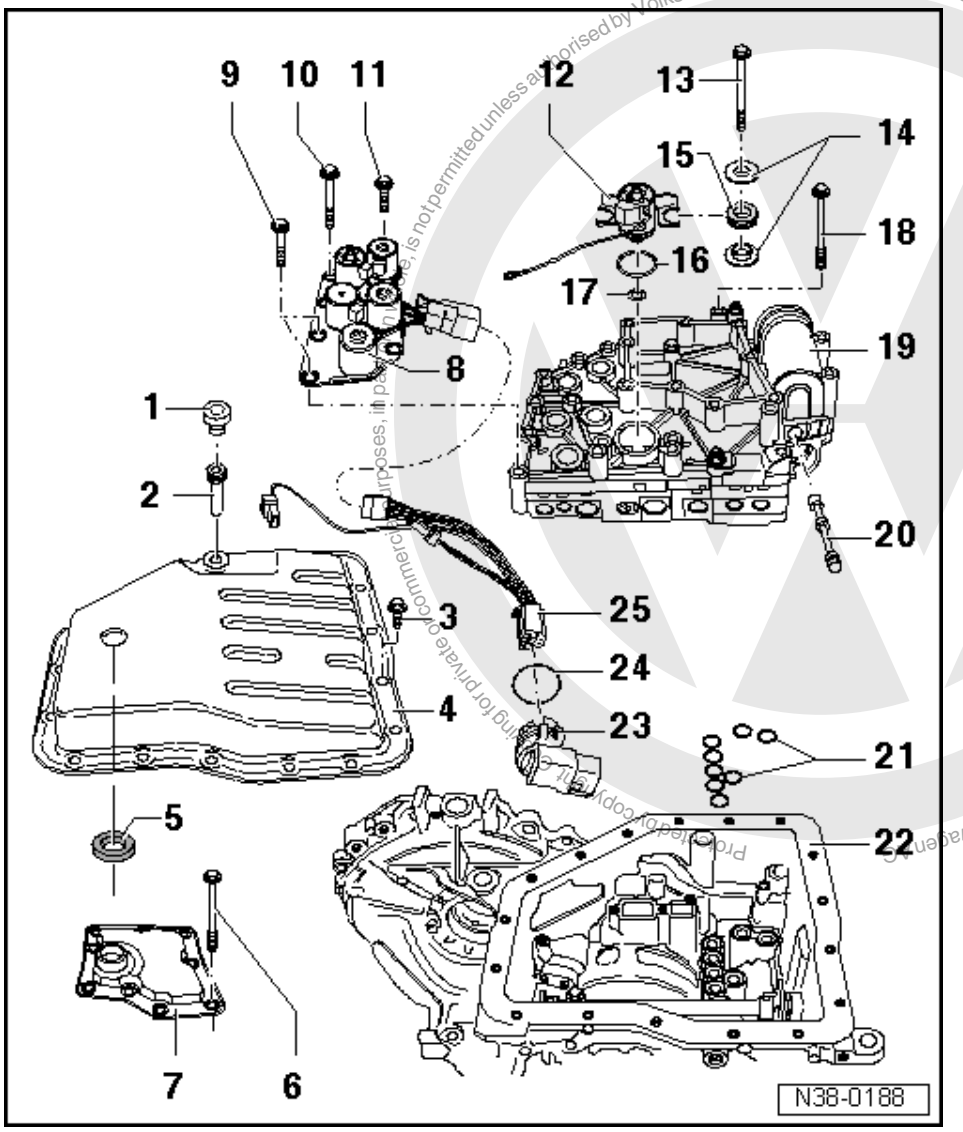

1 Plug, 15 Nm
- Always renew seal =>Fig. 1
- Checking ATF level and topping-up => Page 76

2 Overflow pipe
- Remove when draining ATF
  => Page 86

3 Bolt, 8 Nm

4 Oil pan

Sequence => from page 86 , Dismantling and assembling planetary gearbox

5 Magnet
- Place the support in the oil pan

6 Bolt, 8 Nm

7 ATF screen

satelettronica

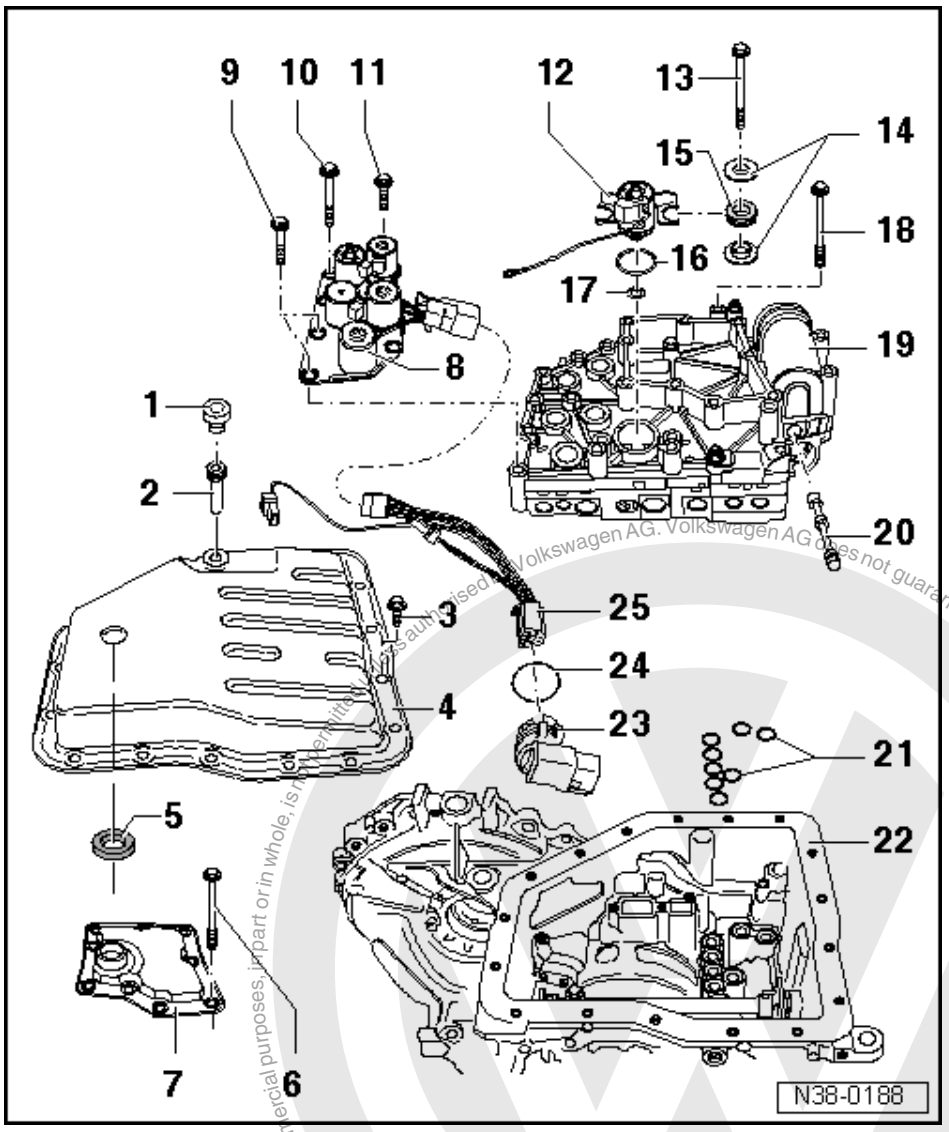

8 Holder
- With solenoid valves: -N88-, -N89-, -N90-, -N91-, -N92-

9 Bolt, 8 Nm
- M6 x 35 mm

10 Bolt, 8 Nm
- M6 x68 mm

11 Bolt, 8 Nm
- M6 x 12 mm

12 Bolt, 8 Nm

13 Bolt, 8 Nm
- M6 x 75 mm

14 Bolt, 8 Nm

15 Protective sleeve

16 O-ring
- Always renew

17 O-ring
- Always renew

18 Bolt, 8 Nm

Protected by copyright. Copying for private or commercial purposes, in part or in whole, is not permitted unless authorised. Volkswagen AG. Volkswagen AG does not guarantee or accept any liability with respect to the correctness of information in this document. Copyright by Volkswagen AG.
satelettronica

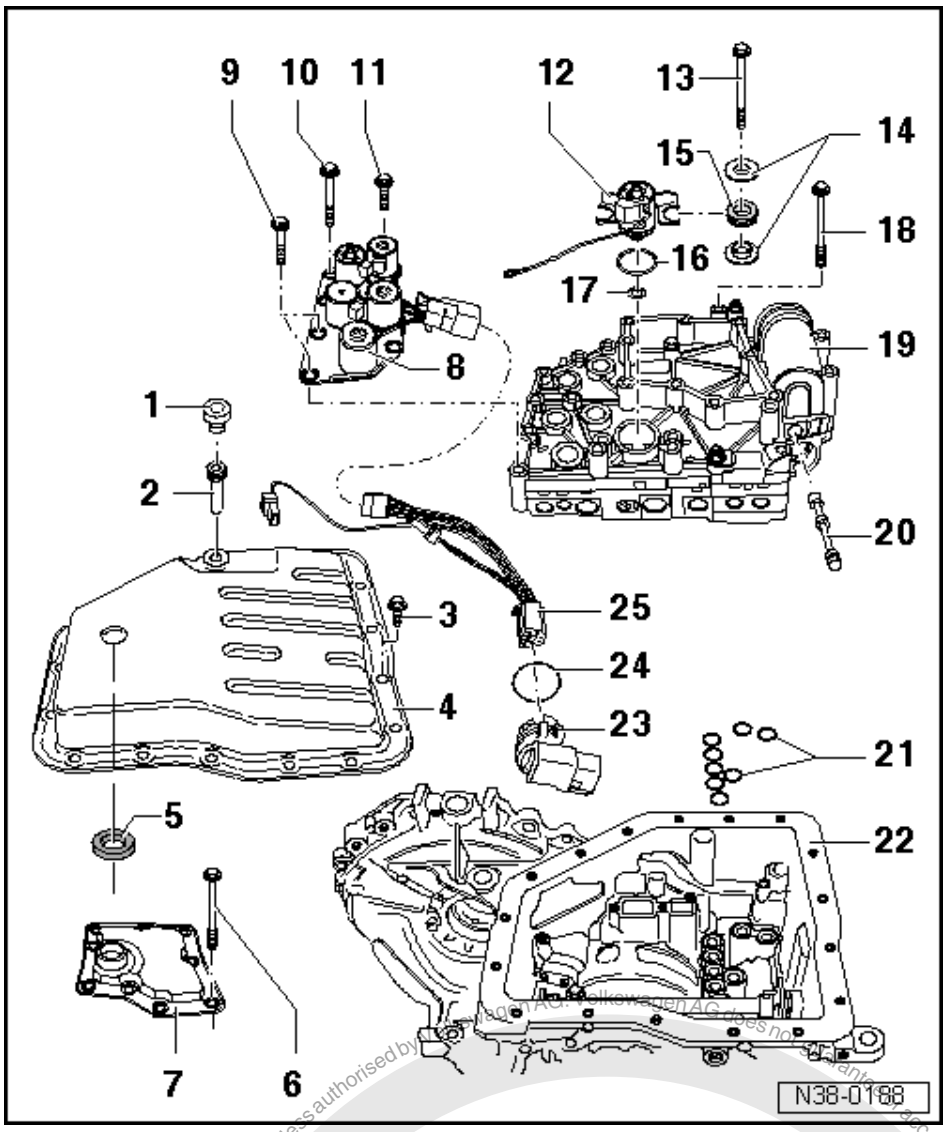

19 Valve chest
- Marking =>fig. 3
- Removing and installing
  => from page 97

20 Spool valve
- Secure against falling out when removing the valve chest

21 O-ring
- Always renew

22 Gearbox housing

23 Connector
- For wiring harness
- Removing => from Page 99
- When installing, ensure that it is in gearbox housing

24 O-ring
- Always renew
- For connector/wiring harness

25 Wiring harness
- For solenoid valves

satelettronica
Protected by copyright. Copying for private or commercial purposes, in part or in whole, is not permitted unless authorised by Volkswagen AG. Volkswagen AG does not guarantee or accept any liability with respect to the correctness of information in this document. Copyright by Volkswagen AG.

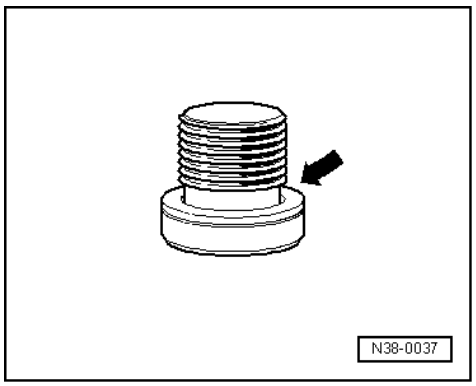

-> Fig.1 Replacing drain plug seal

- Cut open seal -arrow- with side cutting pliers, always renew seal.
- After repairs fit new seal to plug and screw in hand-tight when filling with ATF.
- Fill with ATF; check ATF level and top up => Page 76 .

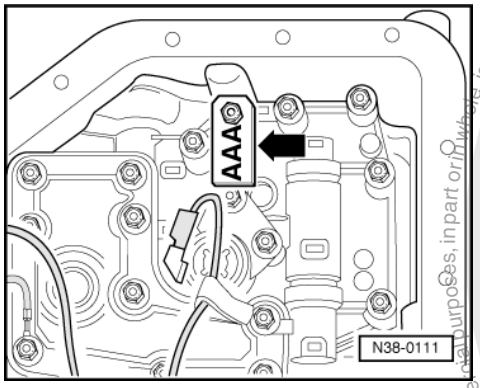

-> Fig.2 Identification of valve chest up to 06.99

Code letters are stamped on a metal tab -arrow-. Metal tab must remain on the valve chest.

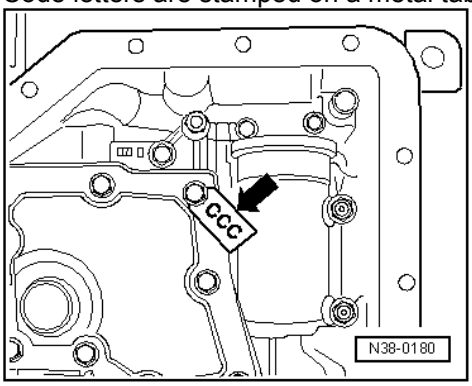

-> Fig.3 Identification of valve chest from 07.99

Code letters are stamped on a metal tab -arrow-. Metal tab must remain on the valve chest.

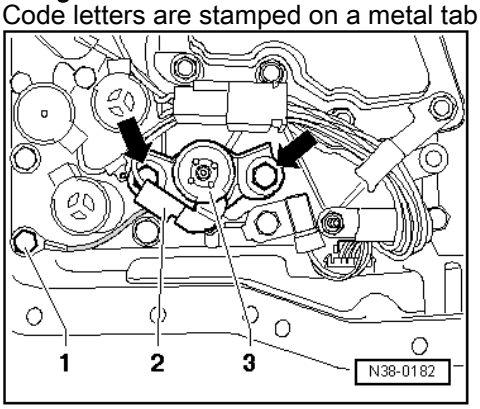

Protected by copyright. Copying for private or commercial purposes, in part or in whole, is not permitted unless authorised by Volkswagen AG. Volkswagen AG does not guarantee or accept any liability with respect to the correctness of information in this document. Copyright by Volkswagen AG.
satelettronica

Protected by copyright. Copying for private or commercial purposes, in part or in whole, is not permitted unless authorised by Volkswagen AG. Volkswagen AG does not guarantee or accept any liability with respect to the correctness of information in this document. Copyright by Volkswagen AG.

satelettronica

-> Fig.4 Removing and installing solenoid valves -N93-

- Remove bolt -1- and valve wire.
- Remove bolts -arrows-.
- Separate connection -2-.
- Remove valve -N93-.
- Renew O-rings.

Installation is performed in the reverse order.

1 - M6 x 35 mm, torque setting 8 Nm

Arrows M6 x 75 mm, torque setting 8 Nm

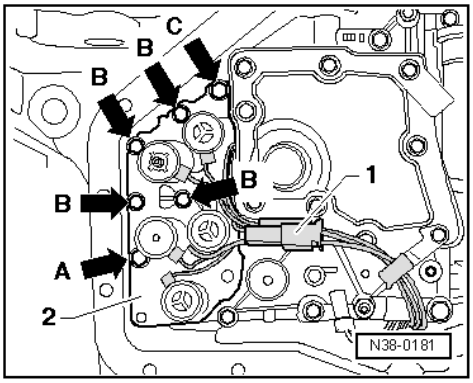

-> Fig.5 Removing and installing holder with solenoid valves -N88- to -N92-

- Removing solenoid valve -N93- => fig. 4 .

Torque setting => from page 170 .

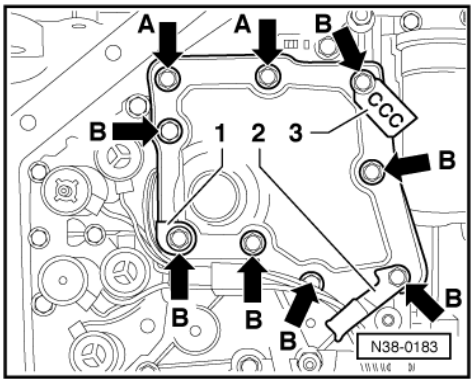

-> Fig.6 Removing and installing ATF screen

- Do not mix up bolts -A- and -B-. Ensure bolts are fitted in the correct positions.

Torque setting => from page 170 .

- Install holders -1- and -2- and identification tag -3- as illustrated.

9 - Dismantling and assembling parking lock

9.1 - Dismantling and assembling parking lock

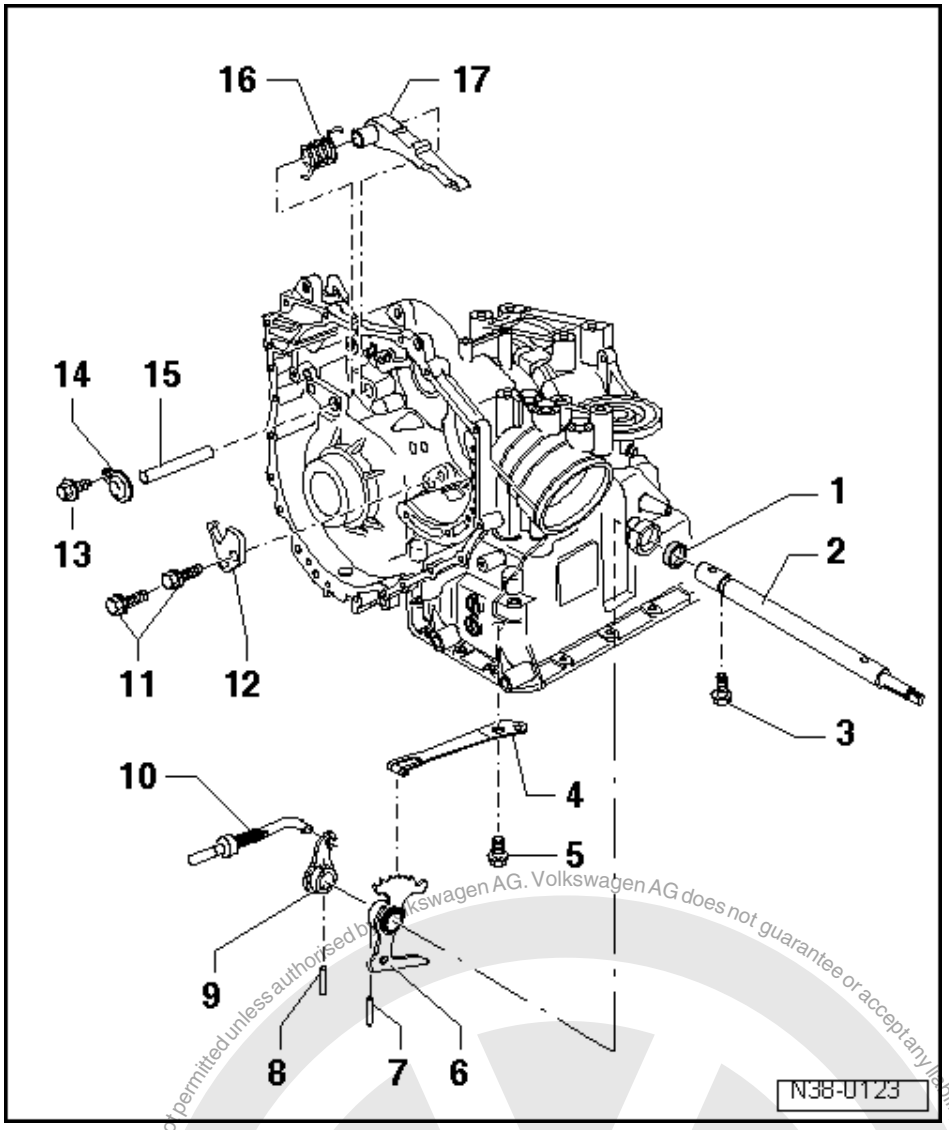

- The pinion shaft with parking lock gear and the valve chest must be removed to dismantle and assemble the parking lock.
- Adjusting multi-function switch => page 27 .

1 Seal
- For selector shaft
- Removing => Fig. 1
- Knocking in => Fig. 2

2 Selector shaft
- Removing and installing => Fig. 3
- Prevent axial impact on the selector shaft when transporting the gearbox as the bolt -item 3 - could shear

3 Bolt, 10 Nm
- Locks the selector shaft in the gearbox housing

satelettronica
Protected by copyright. Copying for private or commercial purposes, in part or in whole, is not permitted unless authorised by Volkswagen AG. Volkswagen AG does not guarantee or accept any liability with respect to the correctness of information in this document. Copyright by Volkswagen AG.

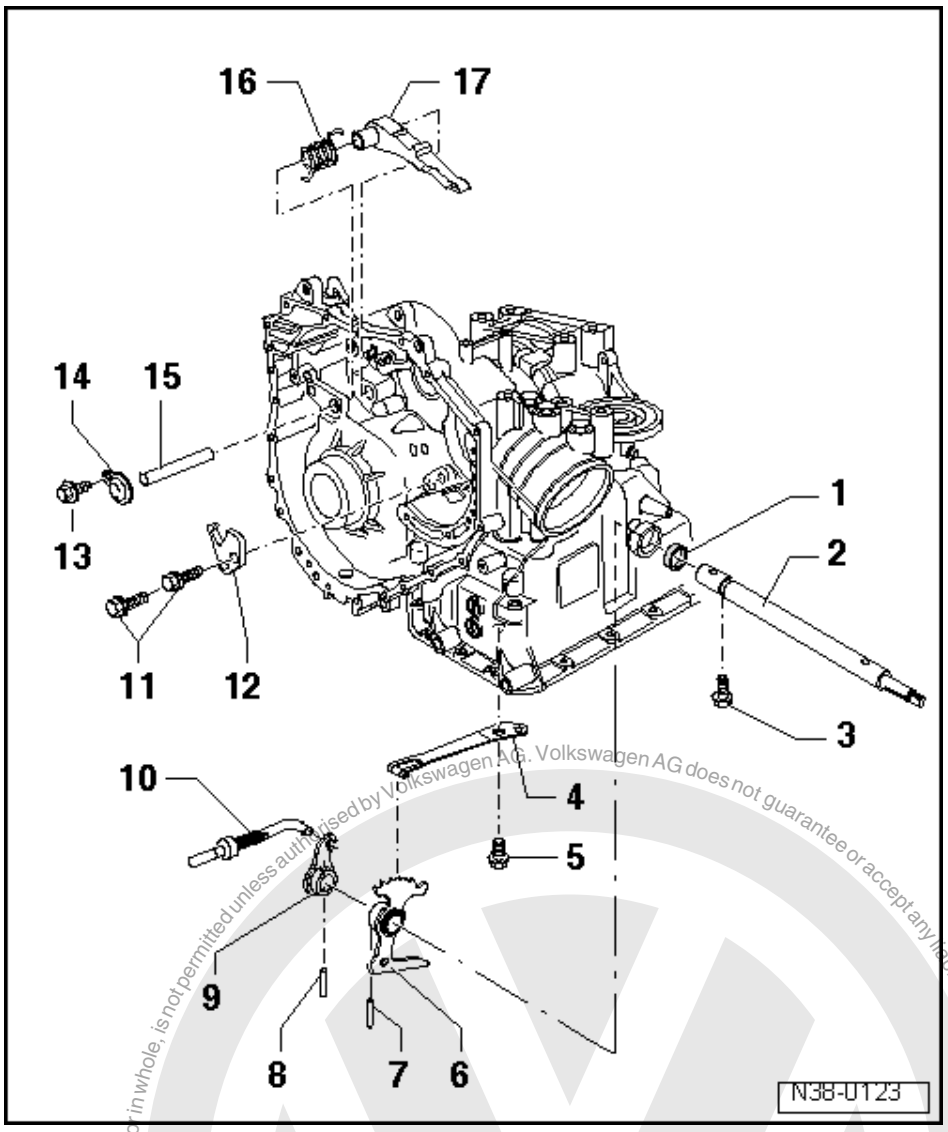

4 Spring for selector segment
- Do not bend

5 Bolt, 5 Nm

6 Selector segment

7 Spring pin
- For selector segment
- Drive out with drift
- Drive in after fitting selector segment => Fig. 3

8 Spring pin
- For lever -item 9 -
- Drive out with drift
- Drive in after fitting selector segment => Fig. 3

9 Lever
- Assemble with engaging lever -item 10 - before fitting on selector shaft

Protected by copyright. Copying for private or commercial purposes, in part or in whole, is not permitted unless authorised by Volkswagen AG. Volkswagen AG does not guarantee or accept any liability with respect to the correctness of information in this document. Copyright by Volkswagen AG.
satelettronica

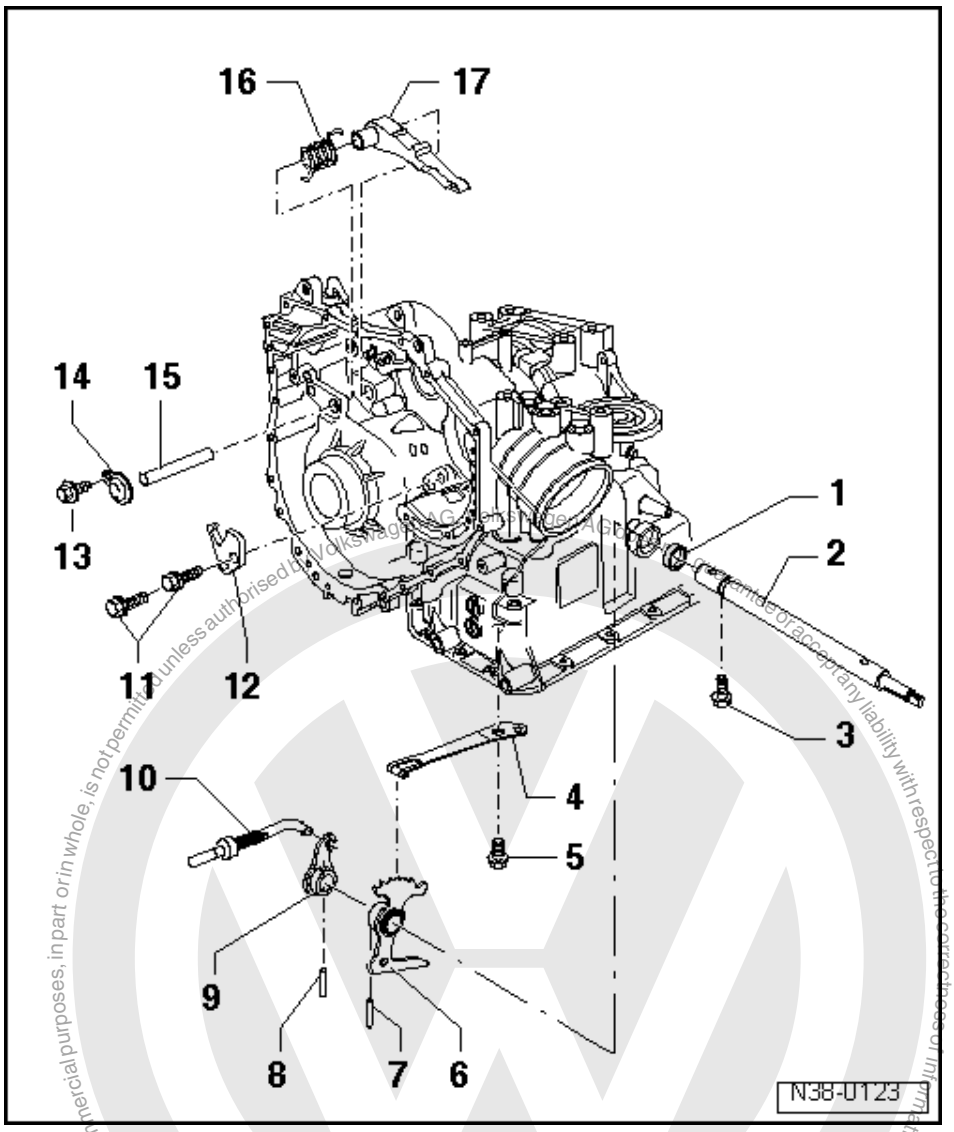

10 Engaging lever
- Fit on selector shaft together with lever

11 Bolt, 10 Nm

12 Supporting plate
- For engaging lever

13 Bolt, 5 Nm

14 Cover plate
- Secures detent lever shaft

15 Shaft for detent lever
- Can be removed and installed by hand

16 Return spring
- Removing and installing => Fig. 4

17 Detent lever
- Removing and installing => Fig. 4

satelettronica

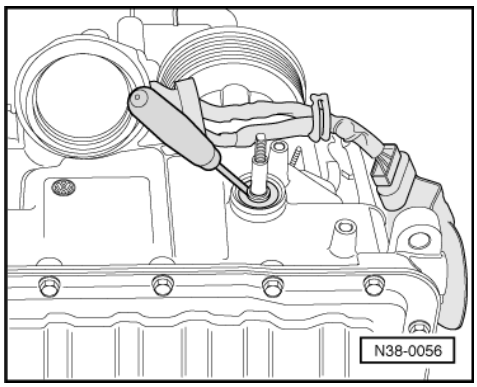

-> Fig.1 Removing selector shaft seal

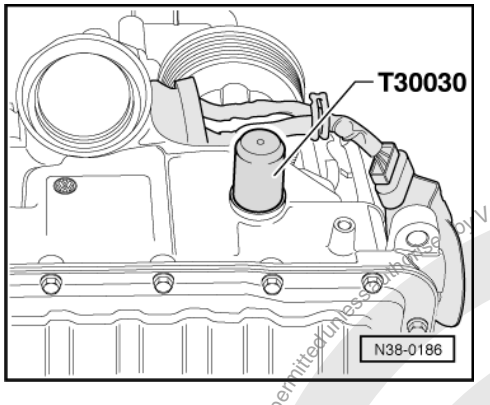

-> Fig.2 Installing selector shaft seal

- Fill space between seal and dust lips of new seal with multi-purpose grease.
- Drive seal in onto stop using either T30030 or press piece 3401.

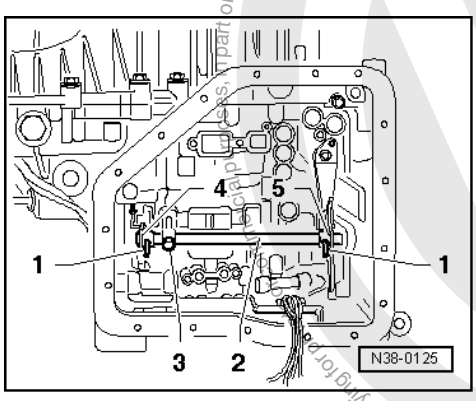

-> Fig.3 Driving the spring pins -1- out and in

Protected by copyright. Copying for private or commercial purposes, in part or in whole, is not permitted unless authorised by Volkswagen AG. Volkswagen AG does not guarantee or accept any liability with respect to the correctness of information in this document. Copyright by Volkswagen AG.

satelettronica

Driving out

- Only drive spring pins for lever -4- and selector segment -5- out as far as is necessary to remove the selector shaft -2-.

Driving in

- Drive spring pins in flush after fitting the selector shaft in selector segment and lever.

- Lock selector lever with bolt -3-.

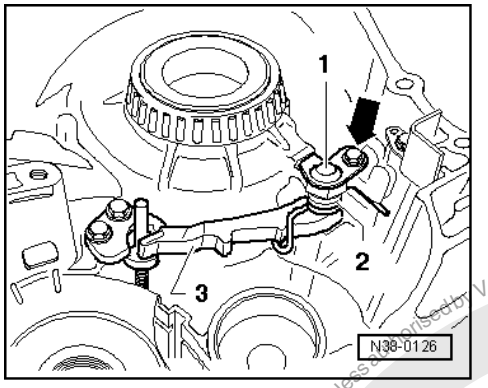

-> Fig.4 Inserting detent lever with return spring

- Remove bolt -arrow-.
- Take off cover plate -1- and pull out shaft for detent lever.
- Remove return spring -2- and detent lever.

When installing, hook end of the return spring on detent lever with the other end of the spring contacting the gearbox housing.

Protected by copyright. Copying for private or commercial purposes, in part or whole, is not permitted unless authorised by Volkswagen AG. Volkswagen AG does not guarantee or accept any liability with respect to the correctness of information in this document. Copyright by Volkswagen AG.
satelettronica

39 - Final drive, Differential

1 - Renewing oil seals for flanged shafts

1.1 - Renewing oil seals for flanged shafts

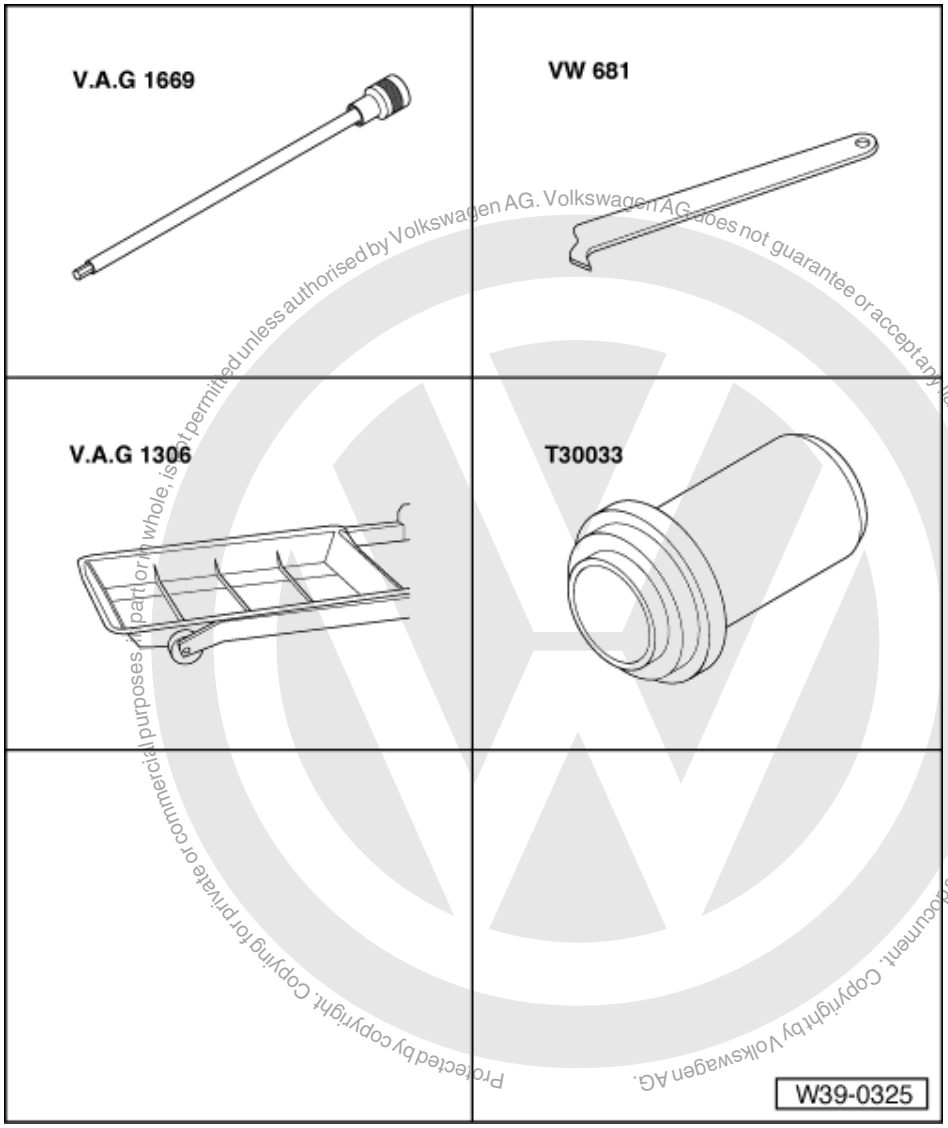

Protected by copyright. Copying for private or commercial purposes, in part or in whole, is not permitted unless authorised by Volkswagen AG. Volkswagen AG does not guarantee or accept any liability with respect to the correctness of information in this document. Copyright by Volkswagen AG.

satelettronica

(Gearbox in vehicle)

Special tools and workshop equipment required

- V.A.G 1669 6 mm A/F key
- VW 681 Oil seal extractor
- V.A.G 1306 Drip tray
- Sealant D176 404 A2

- Remove drive shaft far enough to gain access to flange shaft and shaft can be removed.

=> Running gear; Repair group 40; Removing and installing drive shaft. Removing and installing drive shaft.

- Place drip tray under the gearbox.

1.2 - Removing and installing left-hand flange shaft

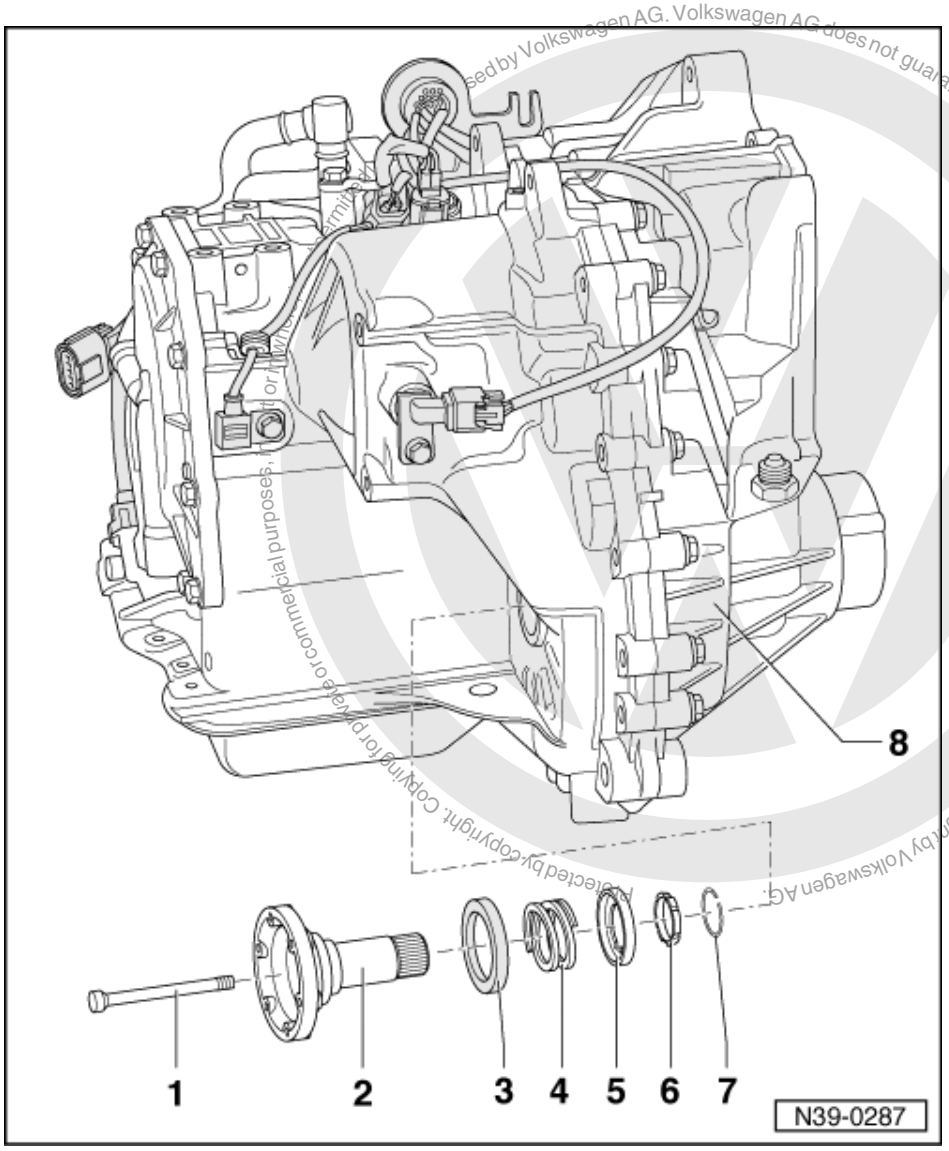

Protected by copyright. Copying for private or commercial purposes, in part or in whole, is not permitted unless authorised by Volkswagen AG. Volkswagen AG does not guarantee or accept any liability with respect to the correctness of information in this document. Copyright by Volkswagen AG.
satelettronica

Always remove and install only one flange shaft, so that the sun wheels in the differential do not turn.

1 Bolt, 22 Nm

- To assemble, screw two bolts into flange and counter-hold using a lever.
- Before installing apply sealant D176404A2 to bolt head.

2 Left-hand flanged shaft

- Do not interchange; left and right-hand flange shafts differ in length

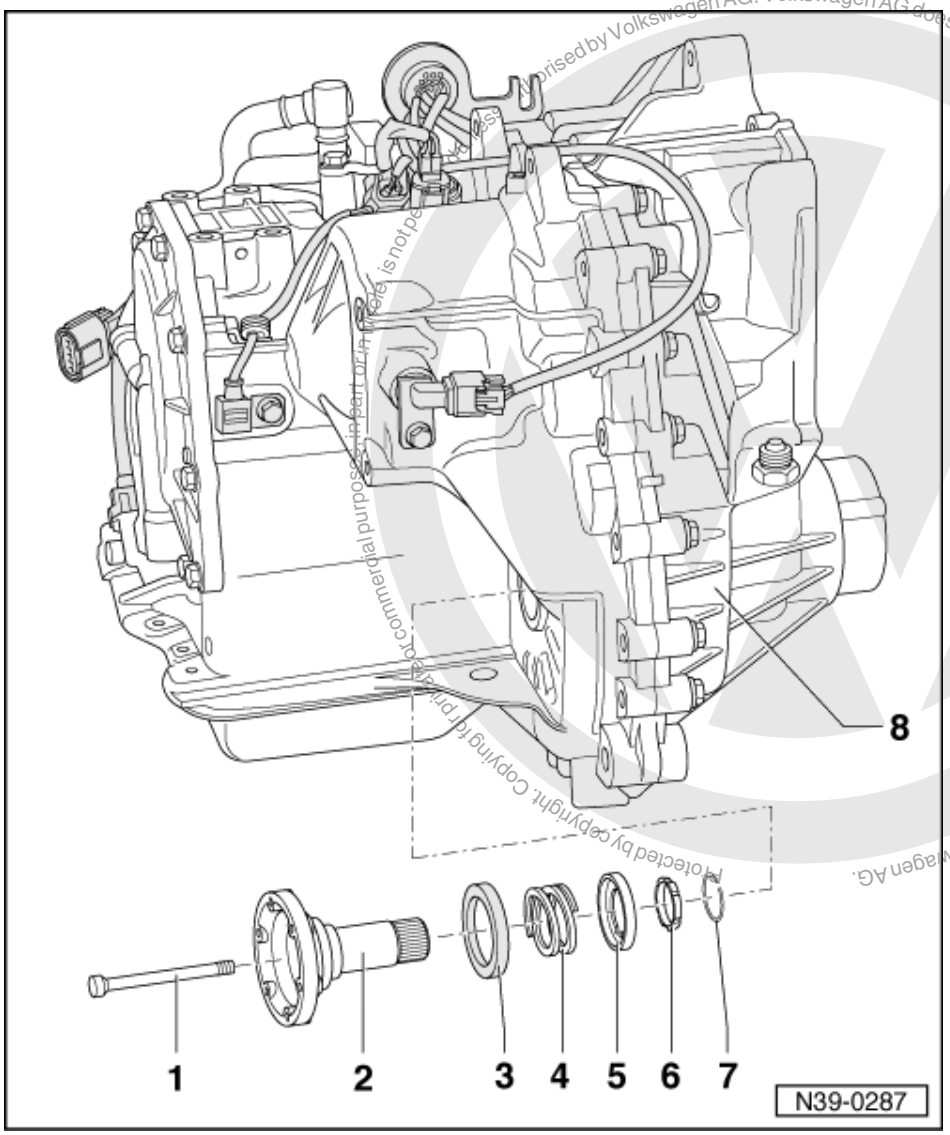

Protected by copyright. Copying for private or commercial purposes, in part or in whole, is not permitted unless authorised by Volkswagen AG. Volkswagen AG does not guarantee or accept any liability with respect to the correctness of information in this document. Copyright by Volkswagen AG.

satelettronica

3 Oil seal for flange/shaft
- Remove with VW 681
- Before installing, pack space between sealing lips with multi-purpose grease
- Driving in => Fig. 1

4 Compression spring

5 Thrust washer
- Place over compression spring

6 Taper ring
- Shoulder faces thrust washer

7 Circlip
- Always replace

8 Gearbox

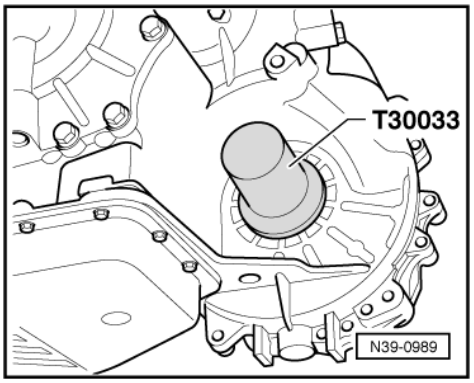

- Fill space between sealing lip and dust lip with multi-purpose grease.

-> Fig.1 Drive seal in onto stop using either T30033 or 3397

- Install flange shaft, apply sealant D 176 404 A2 to bolt head and tighten bolt to tightening torque.
- Install drive shaft.
- Checking and topping up ATF level with gearbox installed =>from Page 76 .

satelettronica

Protected by copyright. Copying for private or commercial purposes, in part or in whole, is not permitted unless authorised by Volkswagen AG. Volkswagen AG does not guarantee or accept any liability with respect to the correctness of information in this document. Copyright by Volkswagen AG.

1.3 - Removing and installing right-hand flange shaft

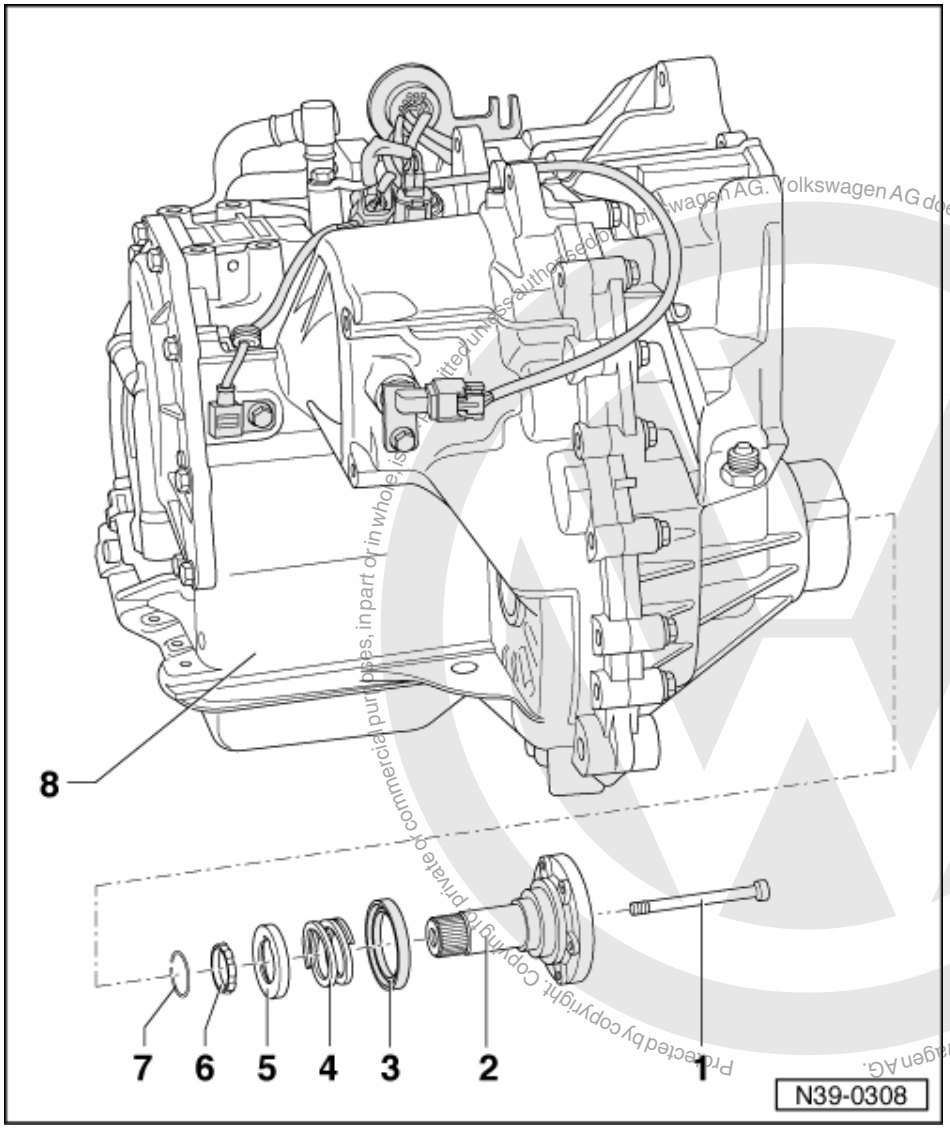

Protected by copyright. Copying for private or commercial purposes, in part or in whole, is not permitted unless authorised by Volkswagen AG. Volkswagen AG does not guarantee or accept any liability with respect to the correctness of information in this document. Copyright by Volkswagen AG.

satelettronica

Always remove and install only one flange shaft, so that the sun wheels in the differential do not turn.

1 Bolt, 22 Nm

- To assemble, screw two bolts into flange and counter-hold using a lever.
- Before installing apply sealant D176404A2 to bolt head.

2 Flanged shaft

- Do not interchange; left and right-hand flange shafts differ in length

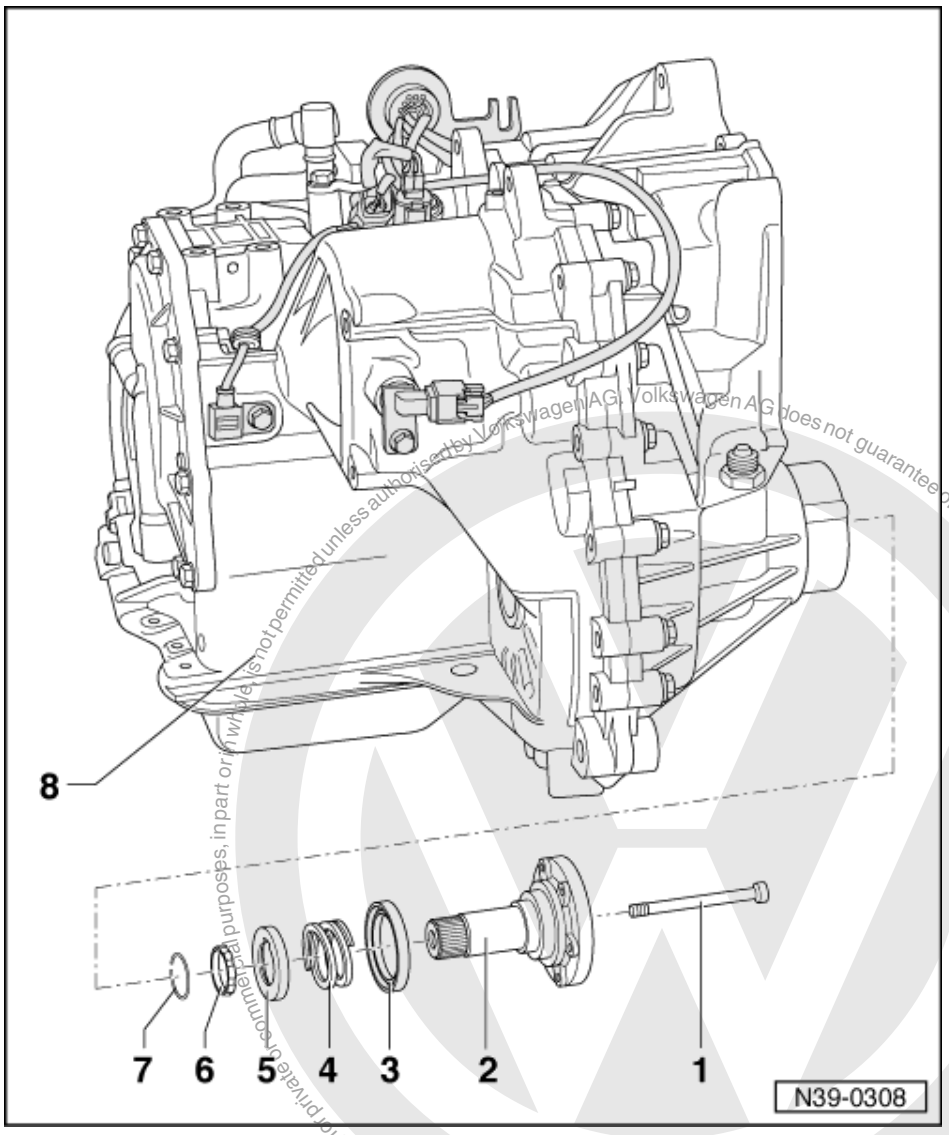

3 Oil seal for flange/shaft
- Before installing, pack space between sealing lips with multi-purpose grease
- Remove with VW 681
- Driving in => Fig. 1

4 Compression spring

5 Thrust washer
- Place over compression spring

6 Taper ring
- Shoulder faces thrust washer

7 Circlip
- Always replace

8 Gearbox

Protected by copyright. Copying for private or commercial purposes, in part or in whole, is not permitted unless authorised by Volkswagen AG. Volkswagen AG does not guarantee or accept any liability with respect to the correctness of information in this document. Copyright by Volkswagen AG.
satelettronica

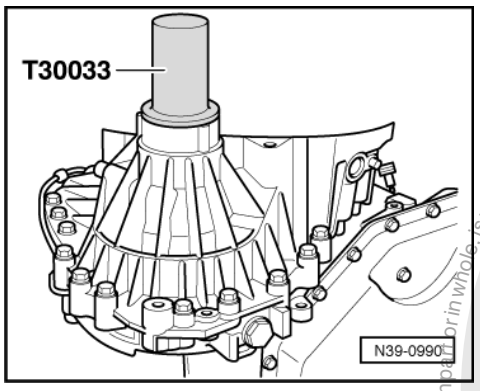

- Fill space between sealing lip and dust lip with multi-purpose grease.

-> Fig.1 Drive seal in onto stop using either T30033 or 3397

- Install flange shaft, apply sealant D 176 404 A2 to bolt head and tighten bolt to tightening torque.
- Install drive shaft.
- Check and top up ATF level =>Page 76 .

Protected by copyright. Copying for private or commercial purposes, in part or in whole, is not permitted unless authorised by Volkswagen AG. Volkswagen AG does not guarantee or accept any liability with respect to the correctness of information in this document. Copyright by Volkswagen AG.
satelettronica

2 - Dismantling and assembling final drive

2.1 - Dismantling and assembling final drive

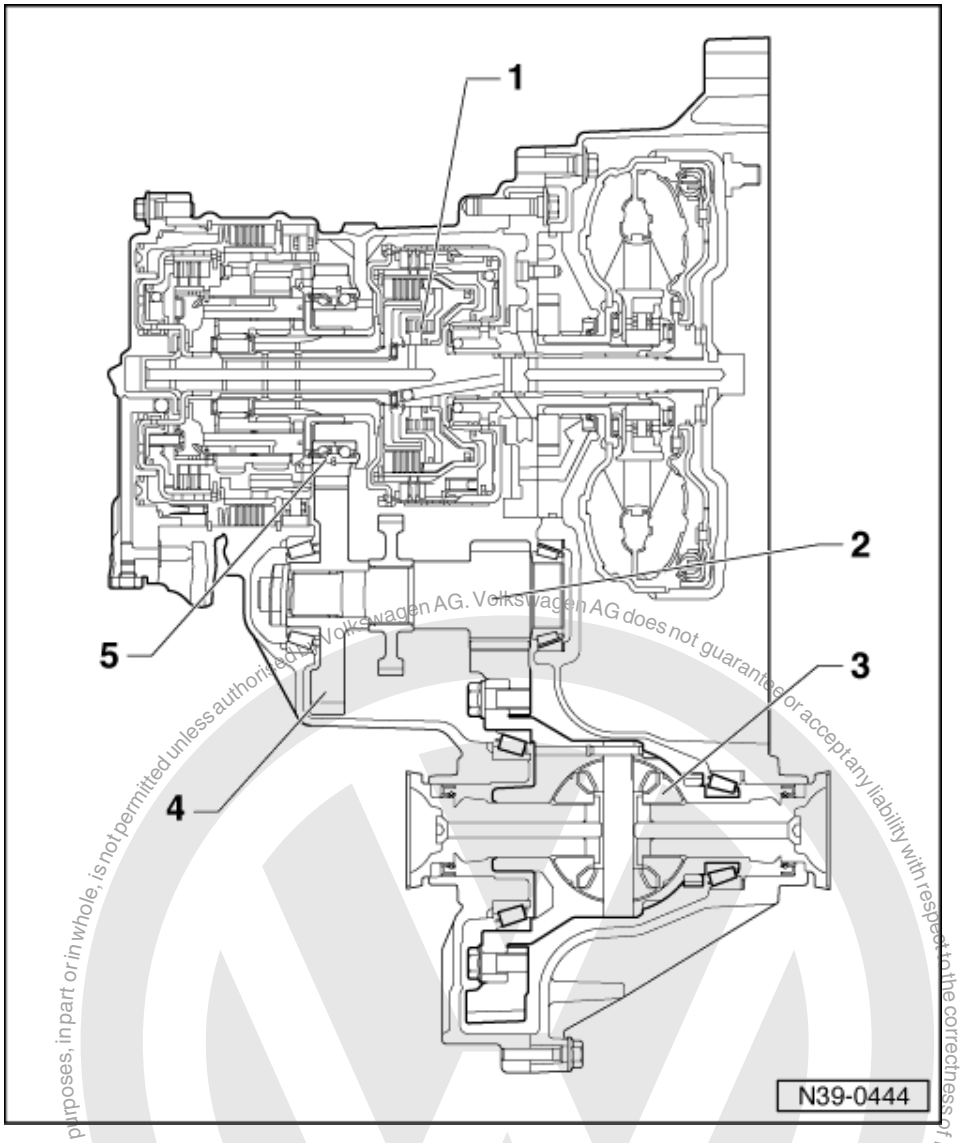

2.2 - Repair overview of final drive

1 Planetary gear
- Dismantling and assembling => Page 86

2 Drive pinion
- Removing and installing => Page 86
- Dismantling and assembling => Page 192
- Adjusting => Page 209
- Adjusting final drive (overview) => Page 204
- Number of teeth => Page 3

satelettronica

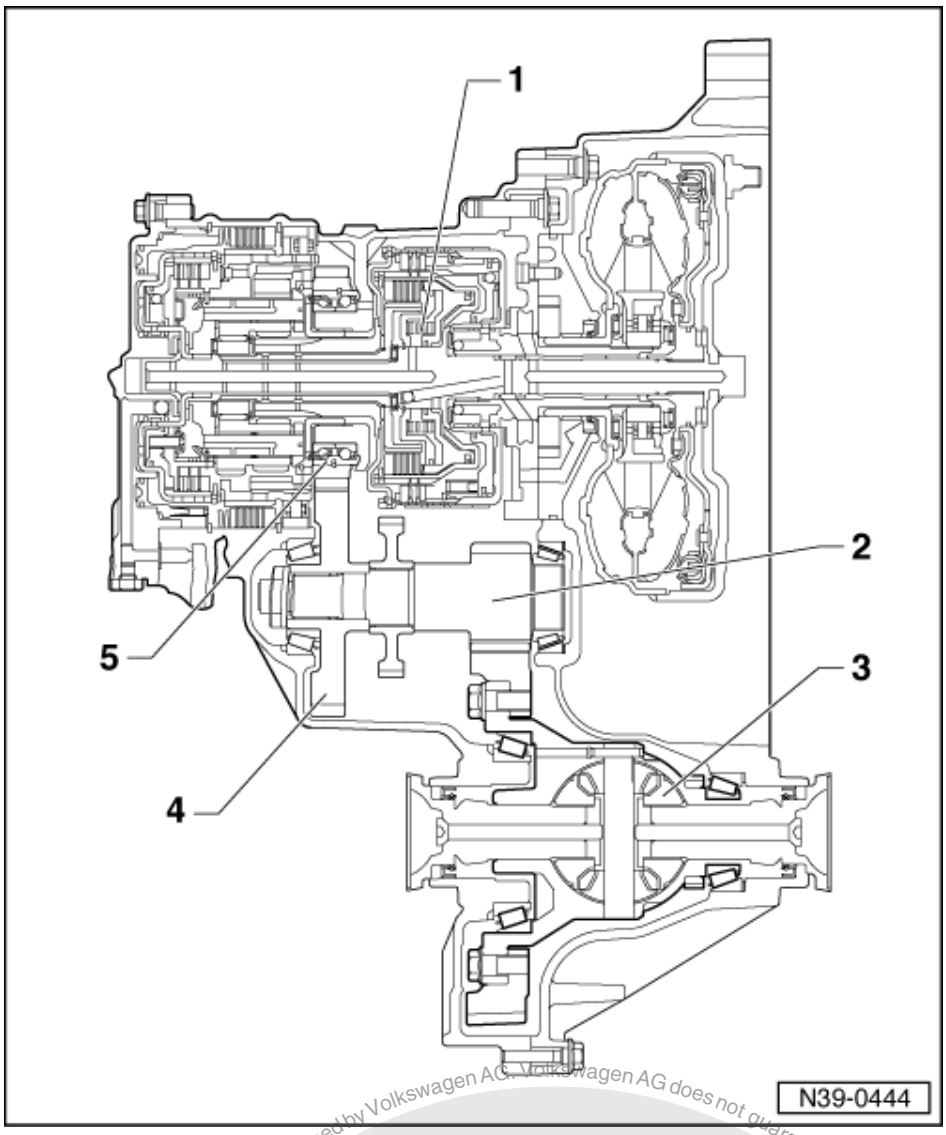

3 Differential
- Removing and installing
  => Page 189
- Dismantling and assembling => Page 198
- Adjusting => Page 206
- Adjusting final drive (overview) => Page 204

4 Output gear
- Removing and installing
  => Page 192

5 Input gear
- Removing and installing
  => Page 86

Protected by copyright. Copying for private or commercial purposes, in part or in whole, is not permitted unless authorised by Volkswagen AG. Volkswagen AG does not guarantee or accept any liability with respect to the correctness of information in this document. Copyright by Volkswagen AG.
satelettronica

2.3 - Removing and installing differential

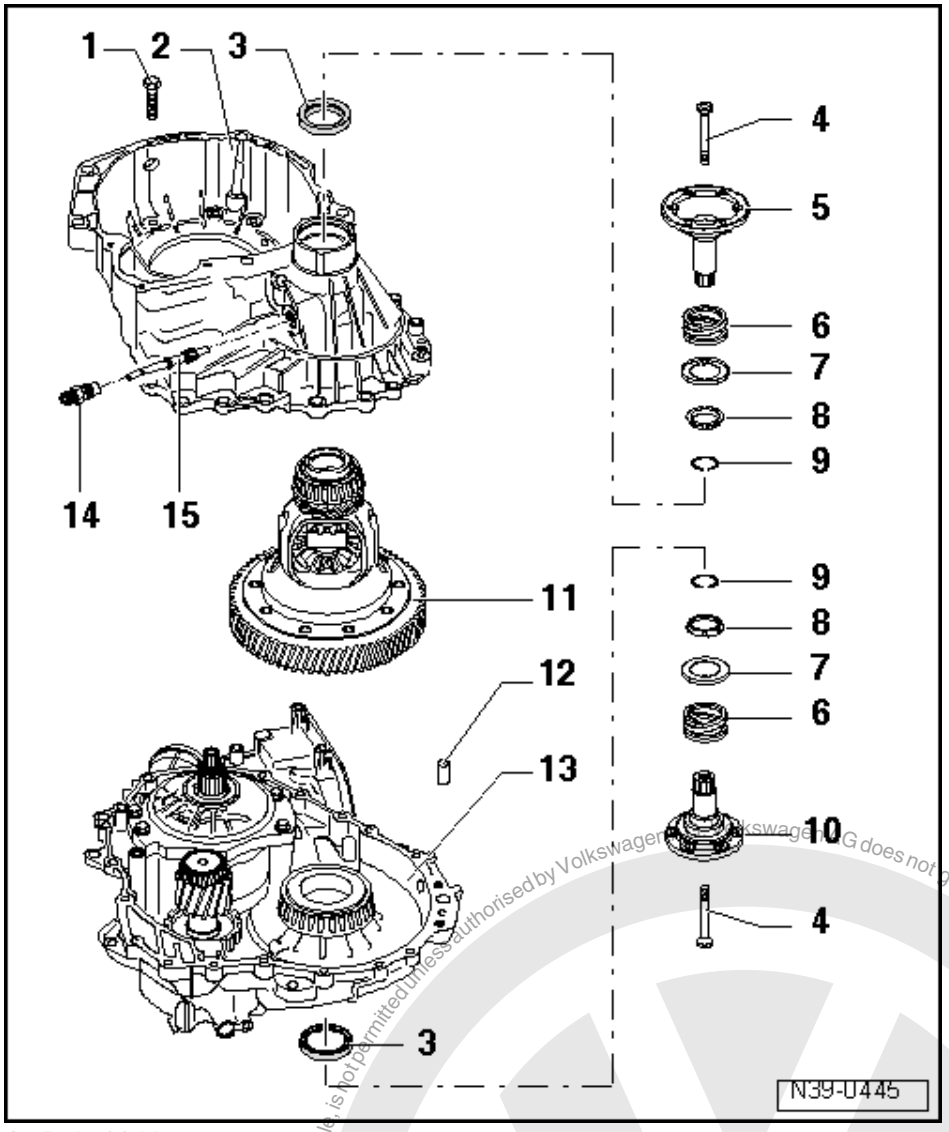

1 Bolt, 30 Nm
2 Torque converter housing
3 Oil seal for flange/shaft
- Before installing, pack space between sealing lips with multi-purpose grease
- Can be renewed with gearbox installed =>Page 180
- Remove with VW 681
- Driving in => Page 183

4 Bolt, 22 Nm

- Before installing apply sealant D176404A2 to bolt head.

5 Flanged shaft
- Do not interchange; left and right-hand flange shafts differ in length

satelettronica
Protected by copyright. Copying for private or commercial purposes, in part or in whole, is not permitted unless authorised by Volkswagen AG. Volkswagen AG does not guarantee or accept any liability with respect to the correctness of information in this document. Copyright by Volkswagen AG.

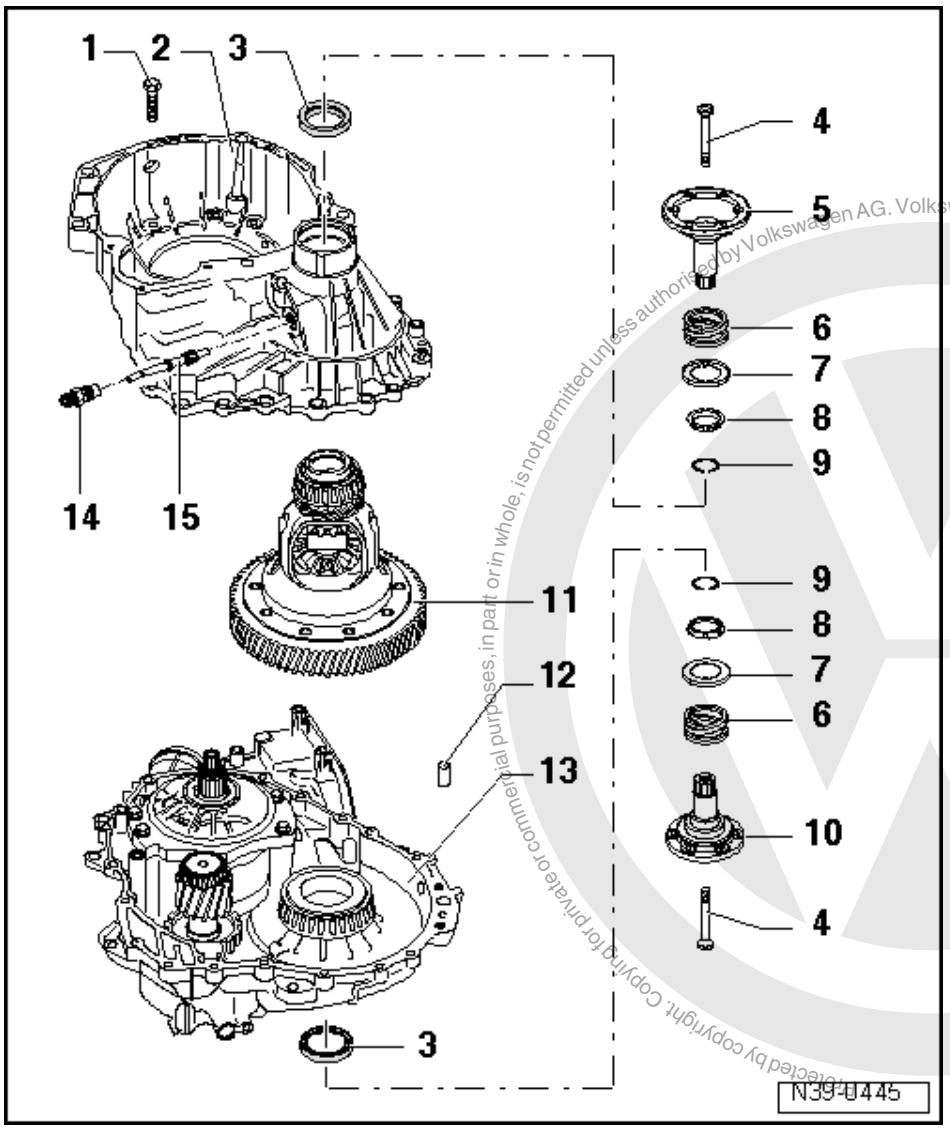

6 Spring for flanged shaft

7 Thrust washer

- Installation position:
  Shoulder towards spring, tongue to tapered ring

8 Tapered ring

- With grooves to secure thrust washer
- Installation position: Taper towards differential housing

9 Securing clip

- Holds taper ring, thrust washer and spring in position when flange shaft is removed

10 Left-hand flanged shaft

- Do not interchange; left and right-hand flange shafts differ in length

Protected by copyright. Copying for private or commercial purposes, in part or in whole, is not permitted unless authorised by Volkswagen AG. Volkswagen AG does not guarantee or accept any liability with respect to the correctness of information in this document. Copyright by Volkswagen AG.
satelettronica

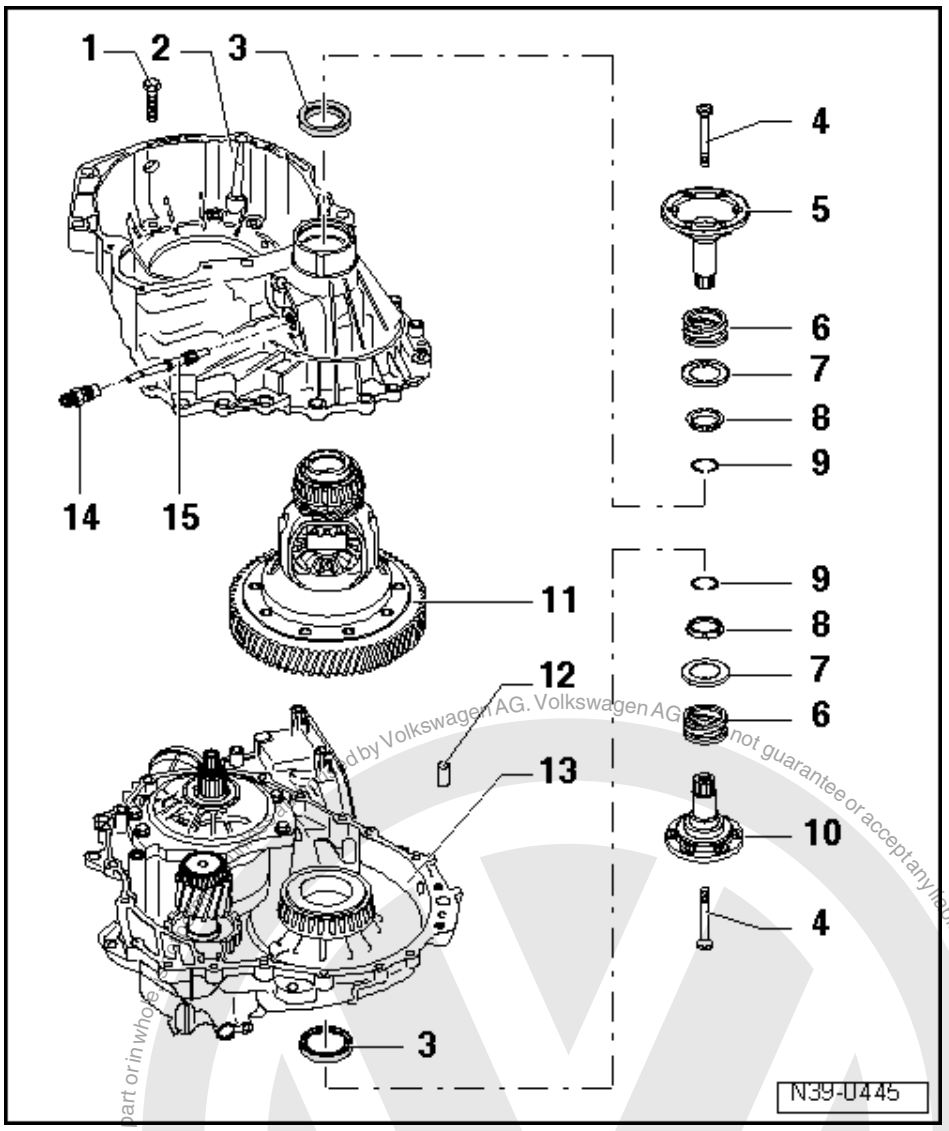

11 Differential

- Dismantling and assembling =>Page 198

12 Fitted dowel

- To centralize the gearbox and torque converter housing

13 Gearbox housing

- Before fitting torque converter housing to gearbox housing, coat sealing surfaces with D176 404 A2

14 Guide bush

- For speedometer drive

15 Speedometer drive

Protected by copyright. Copyright by Volkswagen AG. Reproduction in whole or in part or in whole or in part or in whole or in part by Volkswagen AG. Volkswagen AG does not guarantee or accept any liability with respect to the correctness of information in this document. Copyright by Volkswagen AG.
satelettronica

2.4 - Removing and installing drive pinion

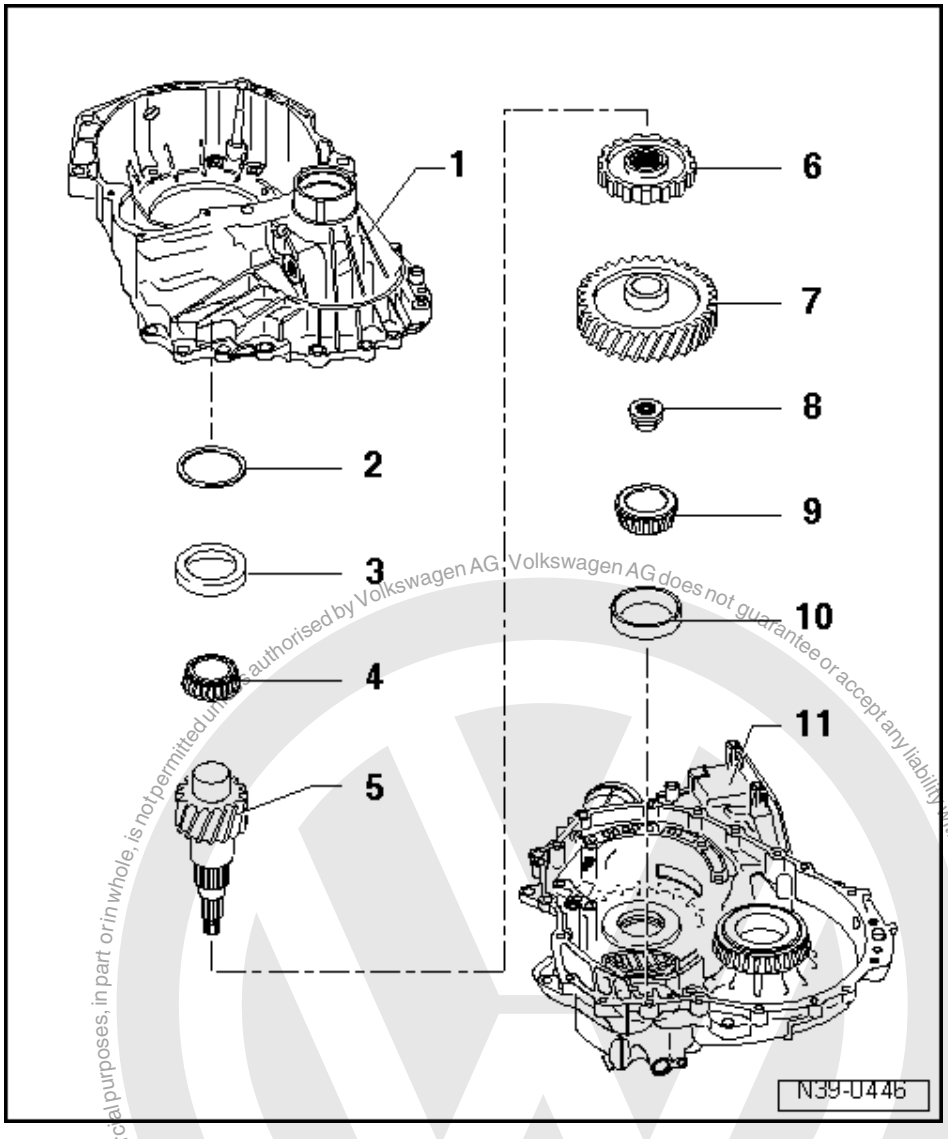

After the torque converter housing is removed, the planetary gearbox must be dismantled down to the large sun-wheel => Page 86 , dismantling and assembling planetary gearbox, before the the drive pinion can be removed.

1 Torque converter housing
2 Shim
- Determining thickness
  => Page 209 , Adjusting drive pinion

3 Taper roller bearing outer race
- Pulling out => Fig. 1
- Pressing in => Fig. 2

4 Taper roller bearing inner race
- Pulling off => Fig. 3
- Pressing on => Fig. 4

Protected by copyright. Copying for private or commercial purposes, in part or in whole, is not permitted unless authorised by Volkswagen AG. Volkswagen AG does not guarantee or accept any liability with respect to the correctness of information in this document. Copyright by Volkswagen AG.
satelettronica

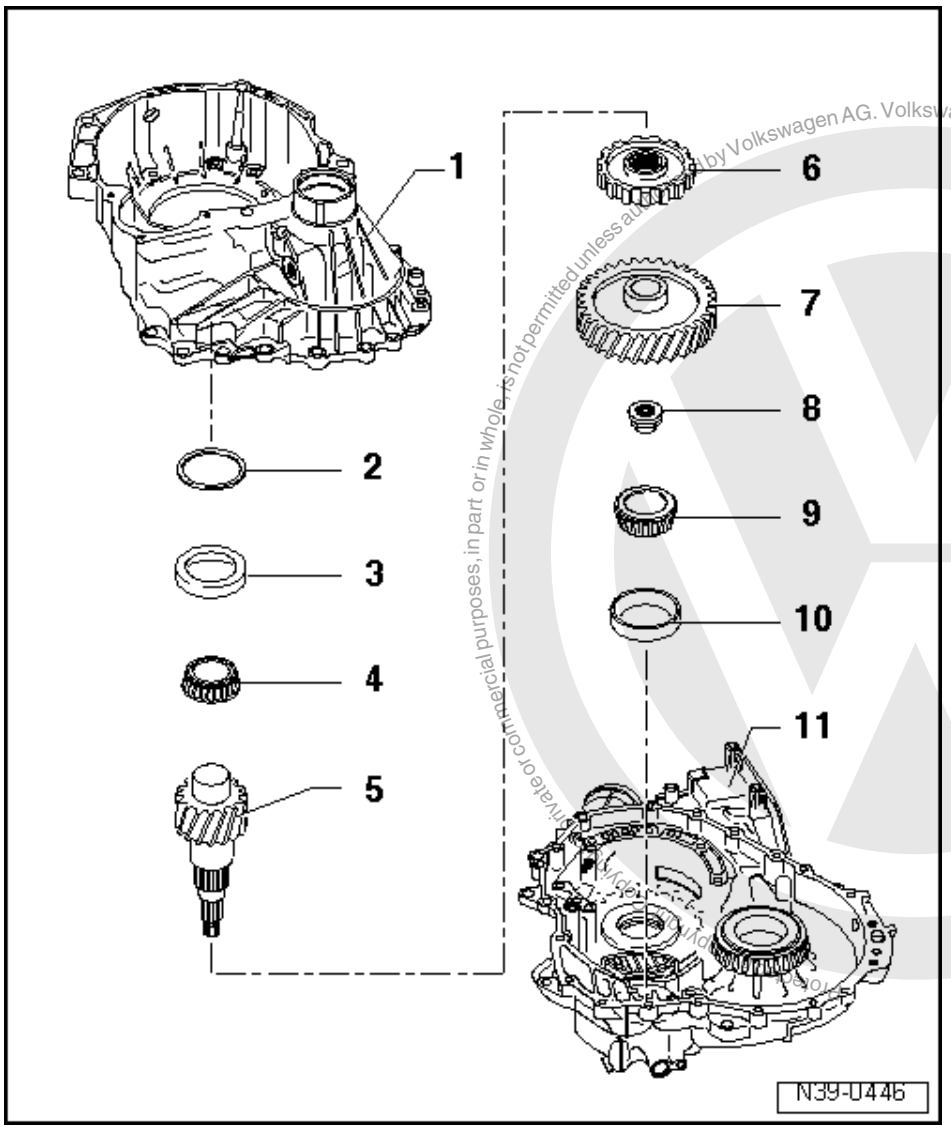

5 Pinion shaft
- Number of teeth => Page 3
- Adjusting =>Page 209

6 Parking lock gear

7 Output gear
- Number of teeth =>from Page 3
- Pressing off => Fig. 5
- Pressing on => Fig. 6

8 Hexagon nut, 145 Nm
- Always replace
- Loosening and tightening =>Fig. 11
- Locking =>Fig. 12

9 Taper roller bearing inner race
- Pulling off => Fig. 7
- Pressing on => fig. 8

10 Taper roller bearing outer race
- Pulling out => Fig. 9
- Pressing in => Fig. 10

11 Gearbox housing

satelettronica
Copyright by Volkswagen AG. Volkswagen AG does not guarantee or accept any liability with respect to the correctness of information in this document. Copyright by Volkswagen AG. Commercial purposes, in part or in whole, is not permitted unless authorized by Volkswagen AG.

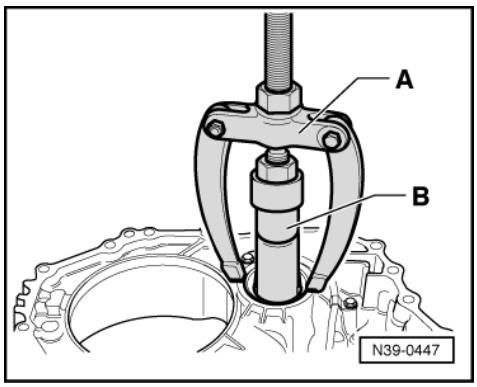

-> Fig.1 Pulling taper roller bearing outer race out of torque converter housing

A - Counter support, e.g. Kukko 22/2

B - Internal puller 46...58 mm, e.g. Kukko 21/7

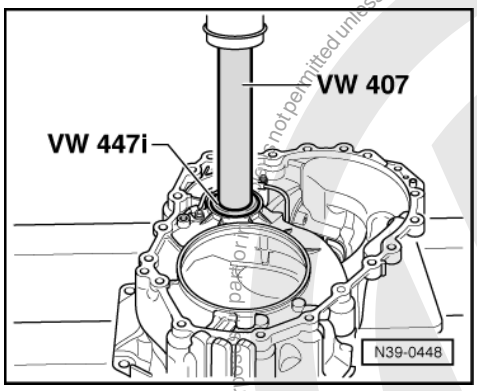

-> Fig.2 Pressing taper roller bearing outer race into torque converter housing

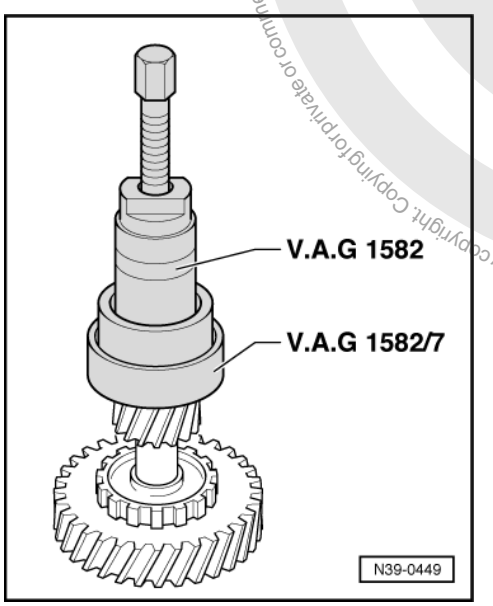

Protected by copyright. Copying for private or commercial purposes, in part or in whole, is not permitted unless authorised by Volkswagen AG. Volkswagen AG does not guarantee or accept any liability with respect to the correctness of information in this document. Copyright by Volkswagen AG.
satelettronica

-> Fig.3 Pulling off taper roller bearing inner race

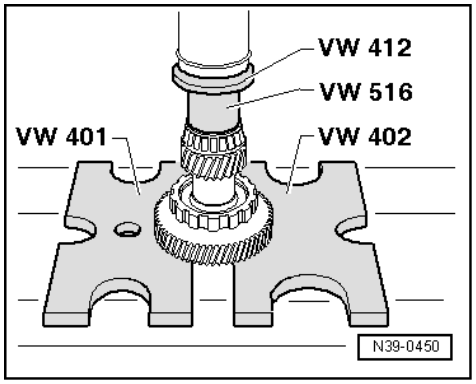

-> Fig.4 Pressing on taper roller bearing inner race

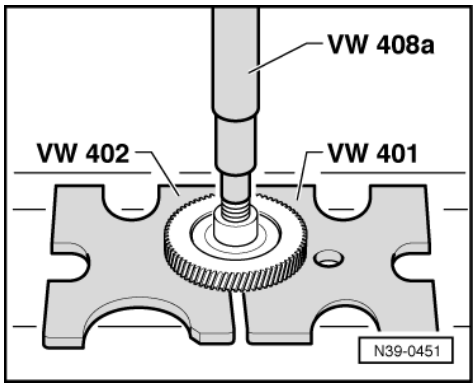

-> Fig.5 Pressing output gear off

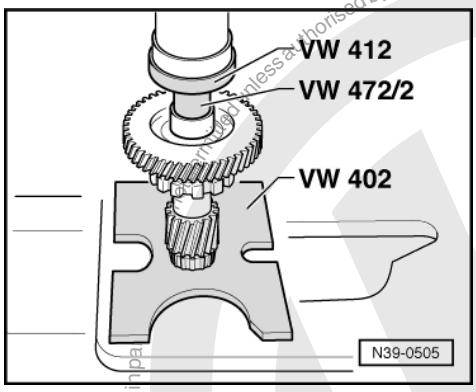

Protected by copyright. Copying for private or commercial purposes, in part or in whole, is not permitted unless authorised by Volkswagen AG. Volkswagen AG does not guarantee or accept any liability with respect to the correctness of information in this document. Copyright by Volkswagen AG.
satelettronica

-> Fig.6 Pressing output gear on

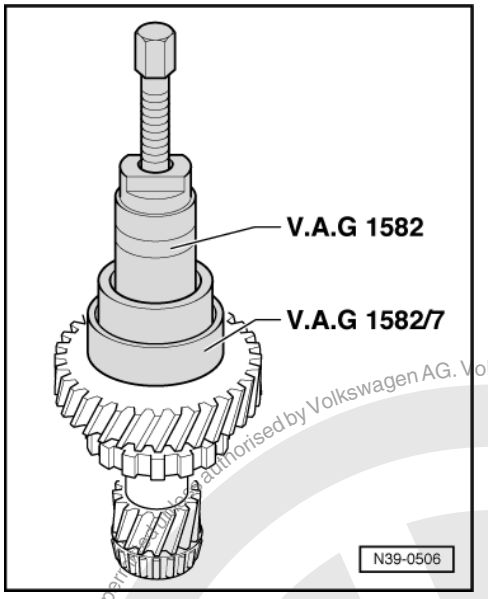

-> Fig.7 Pulling taper roller bearing inner race off

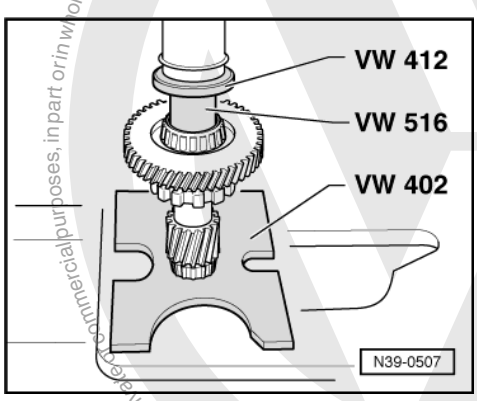

-> Fig.8 Pressing on taper roller bearing inner race

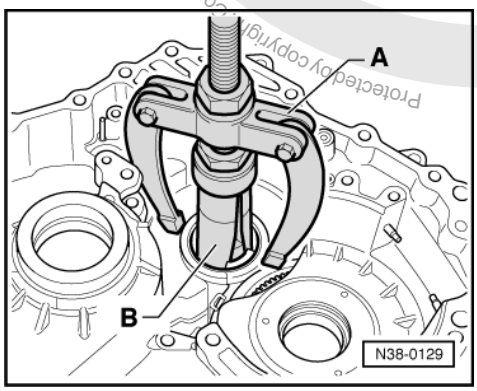

-> Fig.9 Pulling taper roller bearing outer race out of gearbox housing

A - Counter support, e.g. Kukko 22/2

Protected by copyright. Copying for private or commercial purposes, in part or in whole, is not permitted unless authorised by Volkswagen AG. Volkswagen AG does not guarantee or accept any liability with respect to the correctness of information in this document. Copyright by Volkswagen AG.
satelettronica

B - Internal puller 46...58 mm, e.g. Kukko 21/7

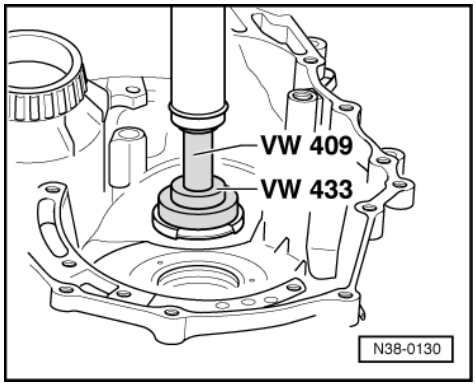

-> Fig.10 Pressing taper roller bearing outer race into gearbox housing

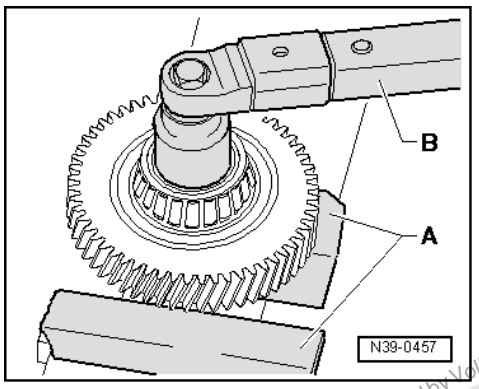

-> Fig.11 Loosening and tightening hexagon nut

- Clamp pinion shaft in a vice fitted with vice clamps -A-.

B - Torque wrench V.A.G 1332

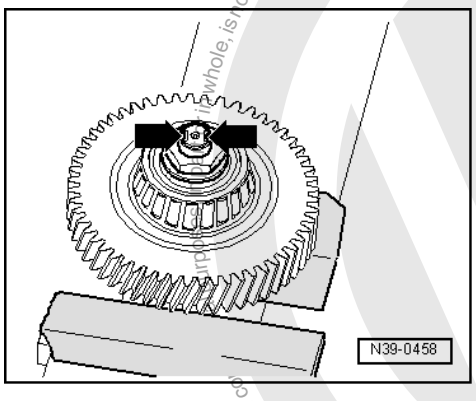

-> Fig.12 Locking hexagon nut

- Peen collar of hexagon nut using a punch at the grooves in the pinion shaft -arrows-.

satelettronica
Protected by copyright. Copyright privileges or copyright in whole, is not permitted unless authorised by Volkswagen AG. Volkswagen AG does not guarantee or accept any liability with respect to the correctness of information in this document. Copyright by Volkswagen AG.

2.5 - Dismantling and assembling differential

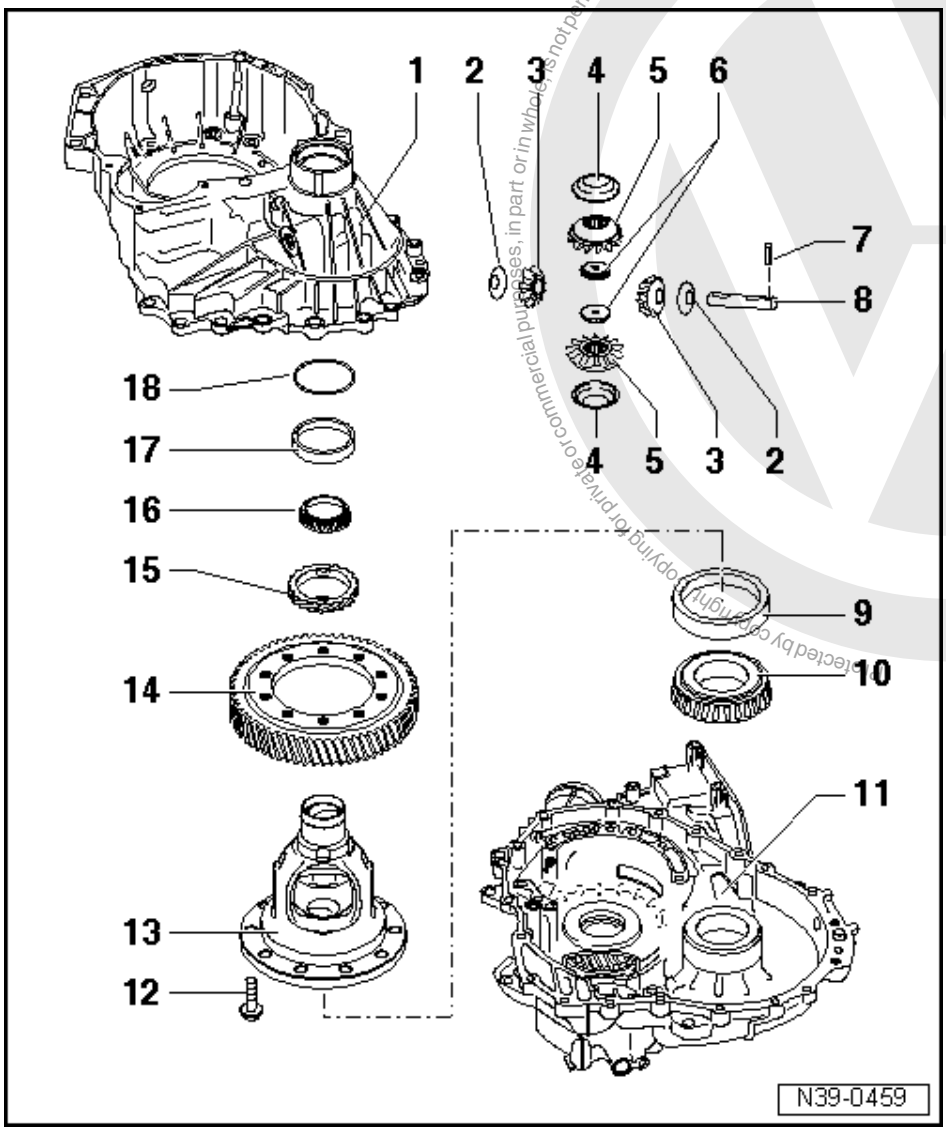

- Heat taper roller bearing inner race to 100 °C before pressing on.

1 Torque converter housing
- Removing and installing => Removing and installing differential, Page 189
- Removing and installing oil pipe
  => Fig. 1

2 Thrust washer
- For planet pinions

3 Planet pinion
- Installing => Fig. 2

4 Thrust washer
- For sun wheels

5 Sun wheel
- Installing => Fig. 2

6 Threaded piece

Copyright by Volkswagen AG. Volkswagen AG does not guarantee or accept any liability with respect to the correctness of information in this document. Copyright by Volkswagen AG. Protected by copyright. Copying for private or commercial purposes, in part or in whole, is not permitted unless authorised by Volkswagen AG.
satelettronica

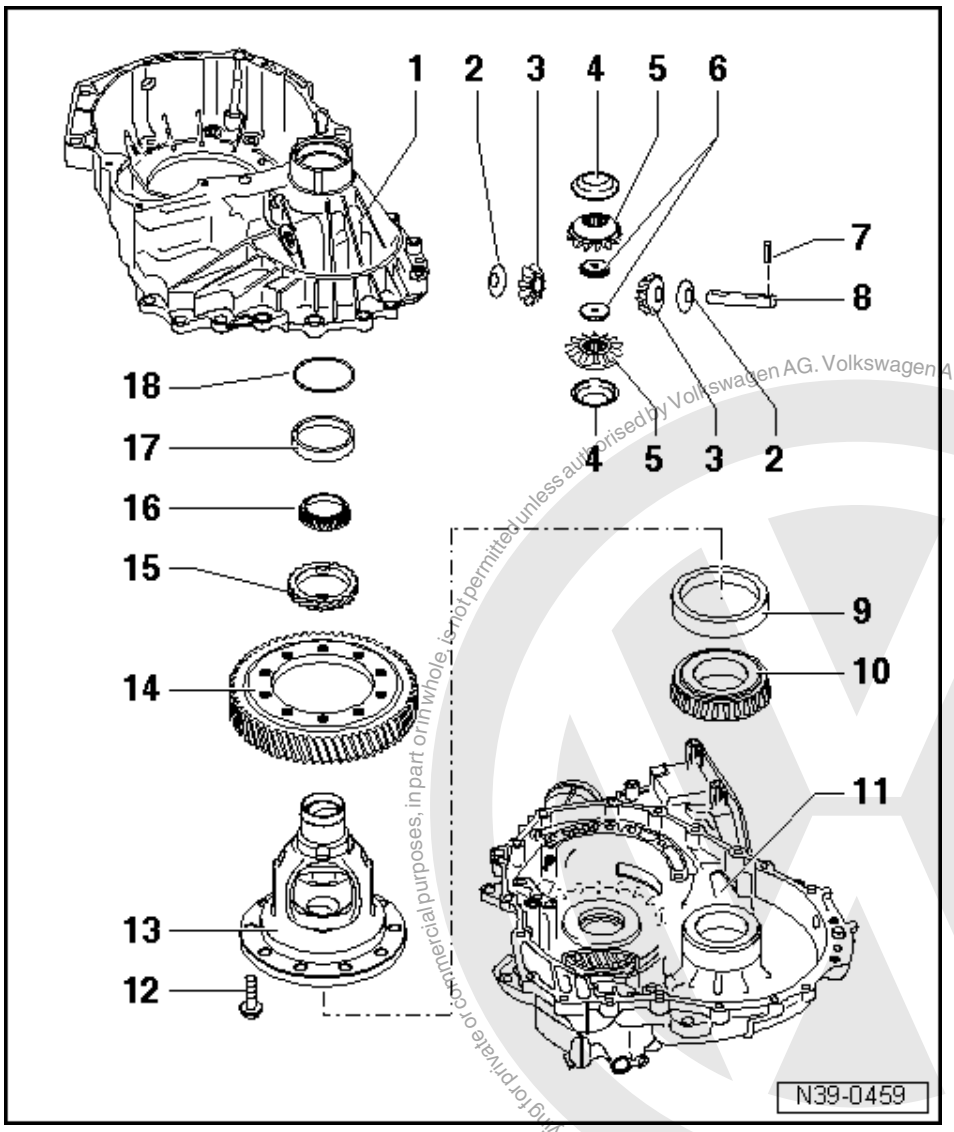

7 Spring pin
- For securing planet pinion axis shaft
- Drive out and in with a drift

8 Shaft for bevel gears
- Drive out with a drift
- When driving in, do not damage thrust washers

9 Taper roller bearing outer race
- Pulling off => Fig. 5
- Pressing into differential housing => Fig. 6

10 Taper roller bearing inner race
- Pulling off => Fig. 3
- Pressing into gearbox housing => Fig. 4

11 Gearbox housing
- Removing and installing => Removing and installing differential, Page 189

12 Bolt, 80 Nm

13 Differential cage

Protected by copyright. Copying for private or commercial purposes, in part or in whole, is not permitted unless authorised by Volkswagen AG. Volkswagen AG does not guarantee or accept any liability with respect to the correctness of information in this document. Copyright by Volkswagen AG.
satelettronica

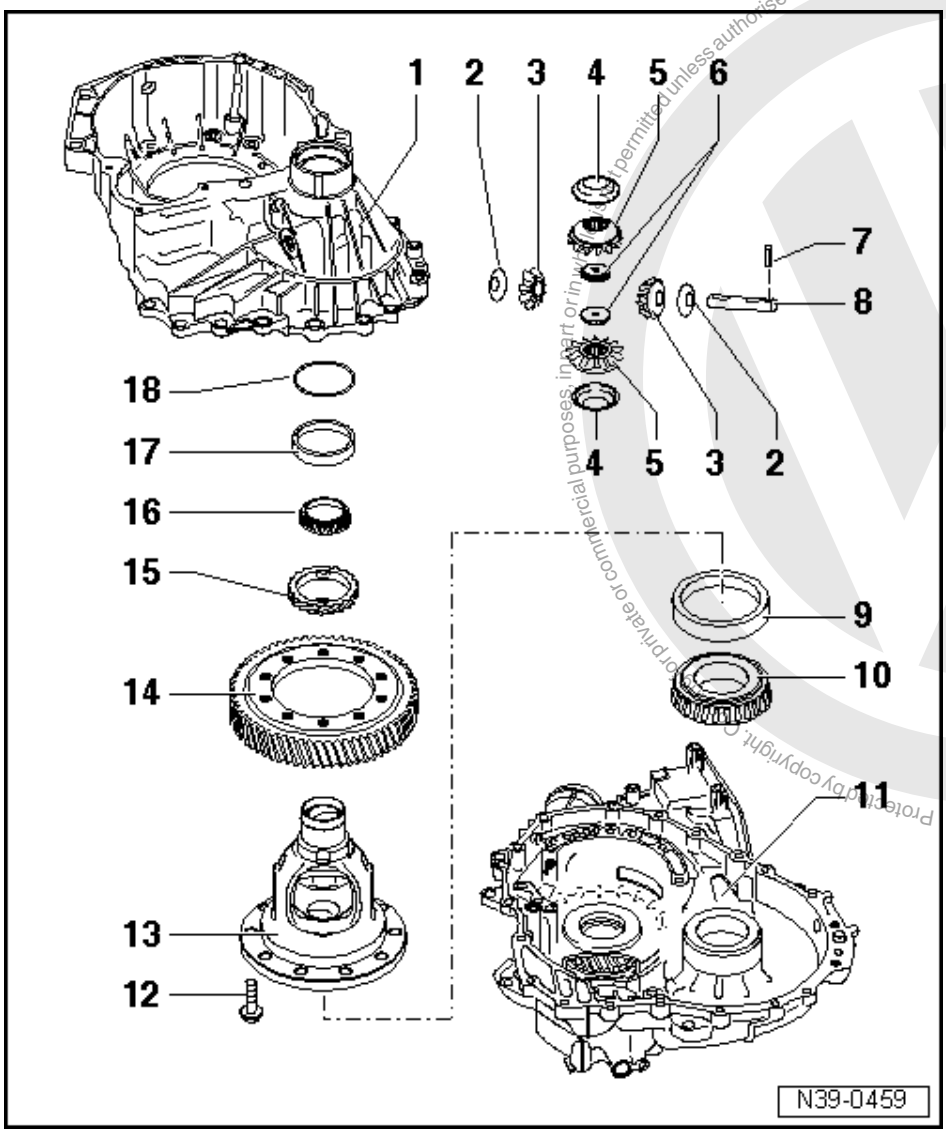

14 Final drive gear wheel
- Number of teeth => Page 3

15 Speedometer drive gear
- Seat drive gear lugs into differential cage grooves, straight face outwards

16 Taper roller bearing inner race
- Pulling off => Fig. 7
- Pressing on => Fig. 8

17 Taper roller bearing outer race
- Pulling out => Fig. 9
- Pressing in => Fig. 10

18 Shim
- Determining thickness => Page 206 , Adjusting differential

Protected by copyright. Copyright by Volkswagen AG. Volkswagen AG does not guarantee or accept any liability with respect to the correctness of information in this document. Copyright by Volkswagen AG.
satelettronica

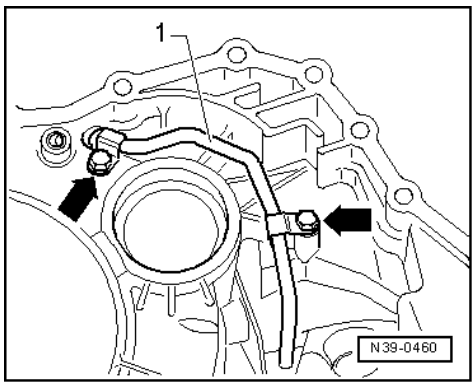

-> Fig.1 Removing and installing oil pipe -1-

- Remove oil pipe retaining clip bolts -arrows-.
- Pull oil pipe out of torque converter housing.
- When installing oil pipe, push into torque converter housing onto stop by hand.

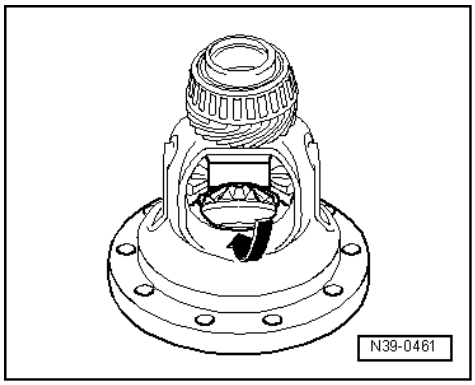

-> Fig.2 Installing differential bevel wheels

- Coat thrust washers for planet pinions with oil and fit on planet pinions.
- Insert planet pinions, knock-in planet pinion axis shaft
- Drive in new spring pin.
- Coat thrust washers for sun-wheels with oil and fit on sun-wheels.
- Place threaded piece in the sun-wheels.
- Insert sun wheels turned through 180°and pivot into position (arrow).

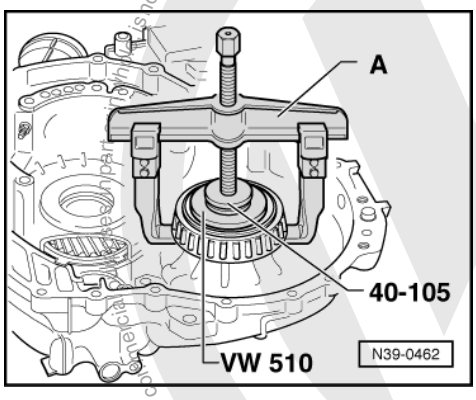

-> Fig.3 Pulling off taper roller bearing inner race

A - Kukko 20-10

satelettronica
Protected by copyright. Copying for private or commercial purposes, in part or in whole, is not permitted unless authorised by Volkswagen AG. Volkswagen AG does not guarantee or accept any liability with respect to the correctness of information in this document. Copyright by Volkswagen AG.

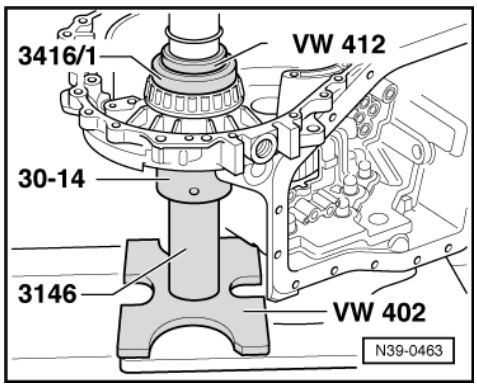

-> Fig.4 Pressing taper roller inner race into gearbox housing

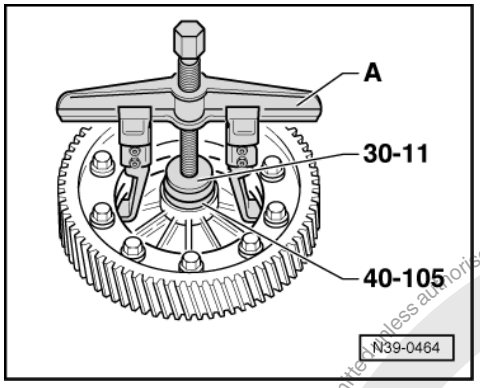

-> Fig.5 Pulling off taper roller bearing outer race

A - Kukko 20-10

- Insert puller hooks into cut-outs in gearbox housing.

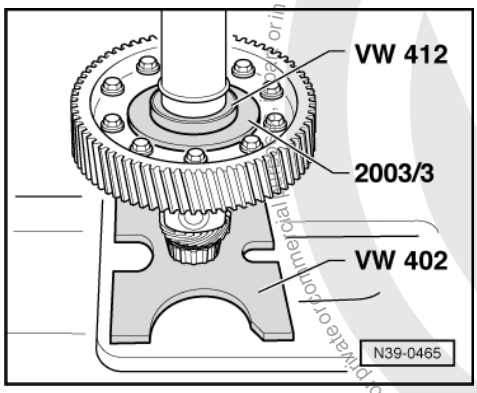

-> Fig.6 Pressing taper roller bearing outer race into differential housing

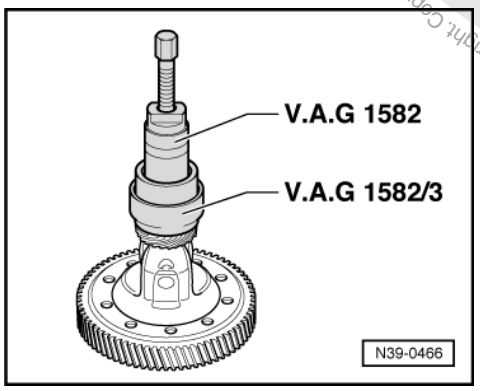

Protected by copyright. Copying for private or commercial purposes, in part or in whole, is not permitted unless authorised by Volkswagen AG. Volkswagen AG does not guarantee or accept any liability with respect to the correctness of information in this document. Copyright by Volkswagen AG.
satelettronica

-> Fig.7 Pulling off taper roller bearing inner race

- Place press piece 3002 on differential housing.

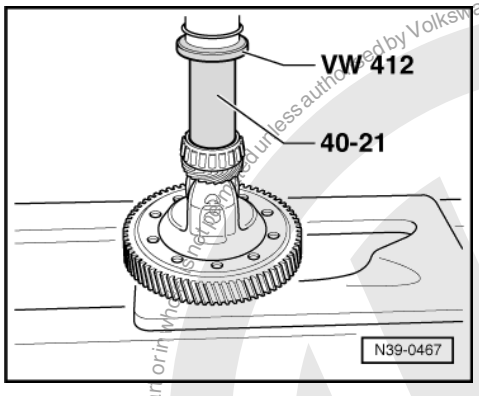

-> Fig.8 Pressing on taper roller bearing inner race

- Press taper roller bearing inner race onto stop on differential cage.

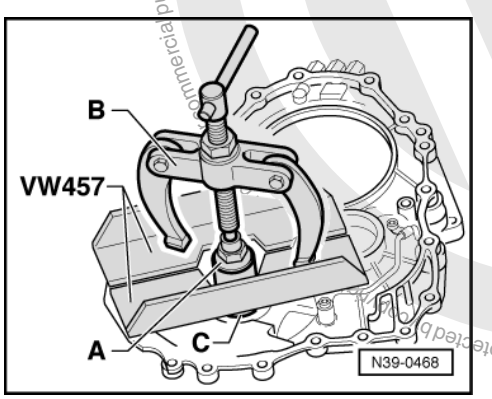

-> Fig.9 Pulling out taper roller bearing outer race -C-

A - Internal puller 46...58 mm, e.g. Kukko 21/7

B - Counter support, e.g. Kukko 22/2

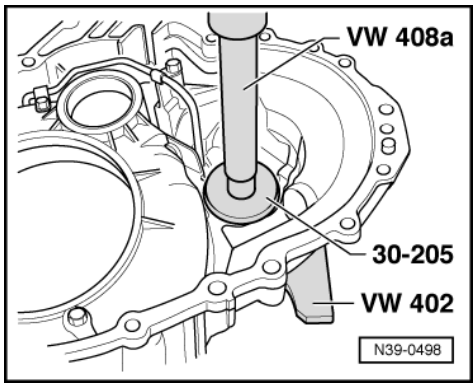

Protected by Copyright. Copying for commercial purposes, part or in whole, is not permitted unless authorised by Volkswagen AG. Volkswagen AG does not guarantee or accept any liability with respect to the correctness of information in this document. Copyright by Volkswagen AG.
satelettronica

-> Fig.10 Pressing taper roller bearing outer race into torque converter housing

3 - Adjusting final drive

3.1 - Adjusting final drive

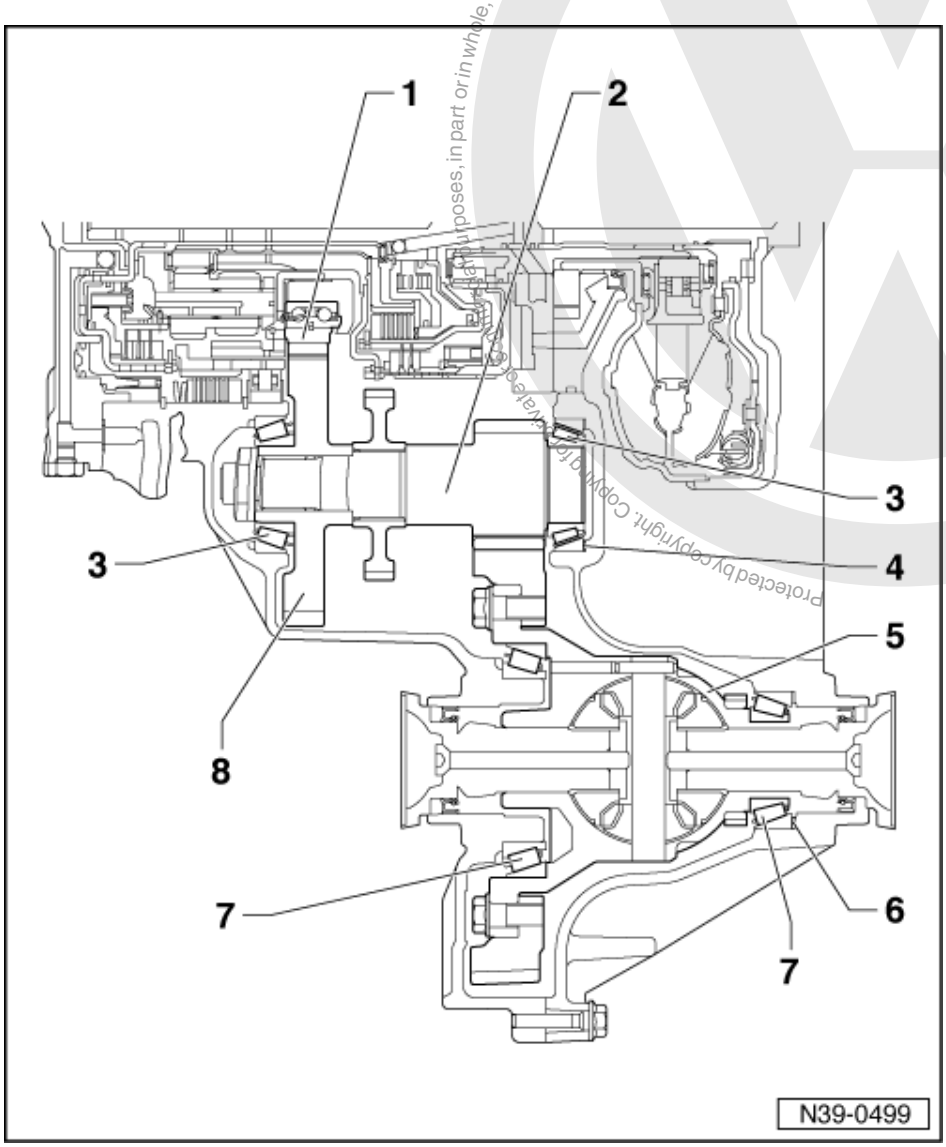

3.2 - Overview of adjustments

1 Input gear
2 Drive pinion
- Adjusting => Page 209

3 Taper roller bearings for drive pinion
- Always replace together
- Re-determine shim when renewing taper roller bearings

4 Shim for drive pinion
- Determining thickness => Page 209

5 Differential

Protected by copyright. Copyright by Volkswagen AG. Volkswagen AG does not guarantee or accept any liability with respect to the correctness of information in this document. Copyright by Volkswagen AG.
satelettronica

- Adjusting => Page 206

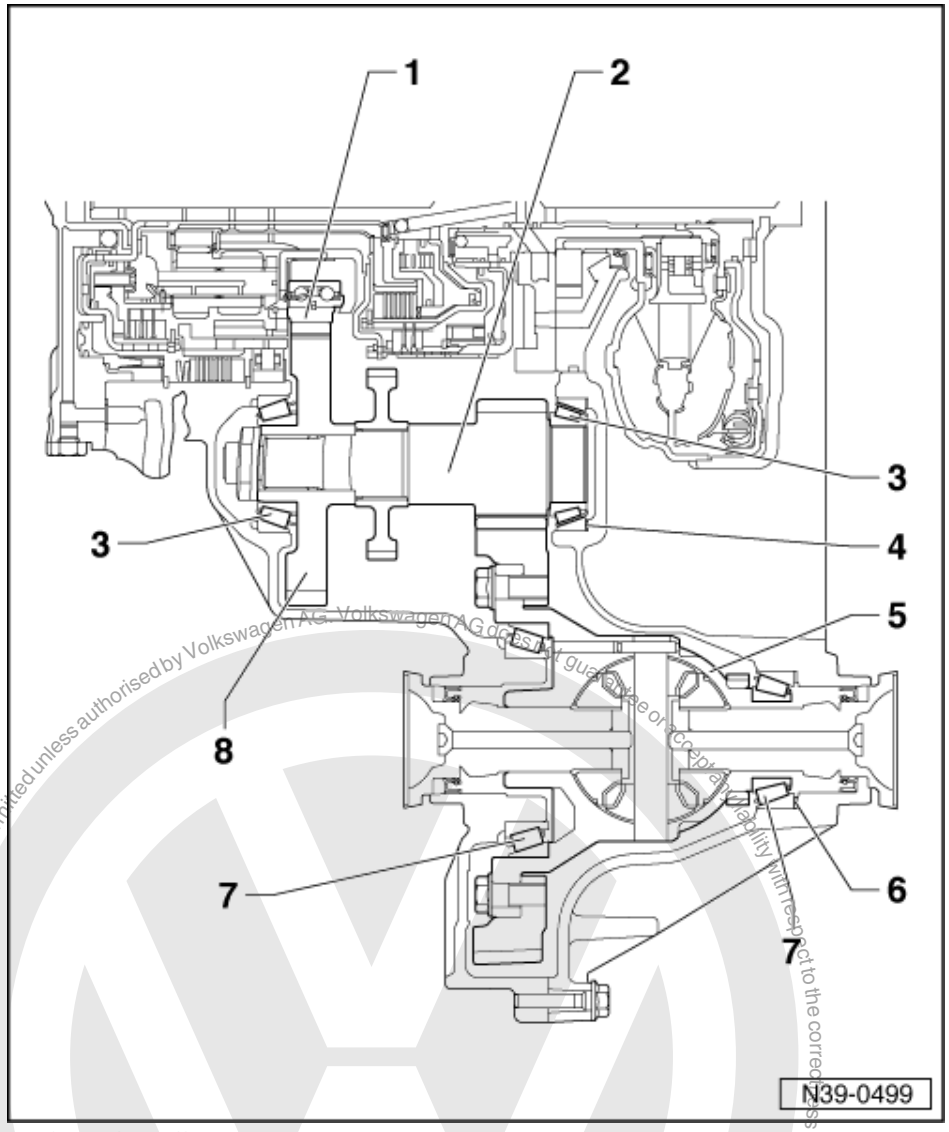

6 Shim for differential
- Determining thickness => Page 206

7 Taper roller bearings for differential
- Always replace together
- Re-determine shim when renewing taper roller bearings

8 Output gear

3.3 - Adjustments to be performed after replacing individual components

When working on the gearbox, it is only necessary to readjust the pinion shaft with output gear or differential housing if components have been replaced which directly affect the final drive adjustment. To prevent unnecessary adjustments, observe the following table:

Component to be changed:	To be adjusted:	
	Differential => Page 206	Pinion shaft with output gear adjusting => Page 209

Protected by copyright. Copyright by Volkswagen AG. Copying for private or commercial purposes, in part or in whole, is not permitted unless authorised by Volkswagen AG. Volkswagen AG does not guarantee or accept any liability with respect to the correctness of information in this document.
satelettronica

Gearbox housing	X	X
Torque converter housing	X	X
Output gear		X
Pinion shaft		X
Pinion shaft taper roller bearings		X
Differential housing with gear	X	
Differential taper roller bearings	X	

3.4 - Adjusting differential

The differential must be adjusted, when

- Gearbox housing
- Torque converter housing
- Differential

or

- Taper roller bearing

have been changed.

Necessary adjustment work when replacing individual components => Page 205 .

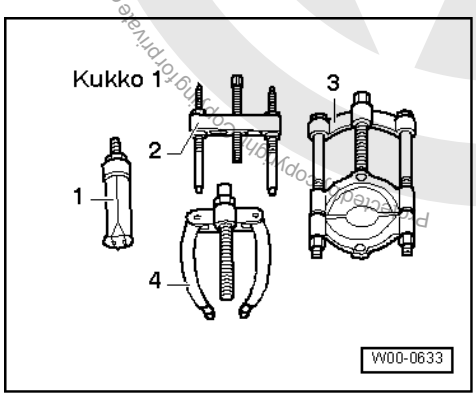

Special tools and workshop equipment required

- Dial gauge
- Dial gauge extension from adapter 2066
- 1 - Kukko 21/7 Internal puller
- 4 - Kukko 22/2 Counter support

Volkswagen AG. Volkswagen AG does not guarantee or accept any liability with respect to the correctness of information in this document. Copyright by Volkswagen AG.
satelettronica

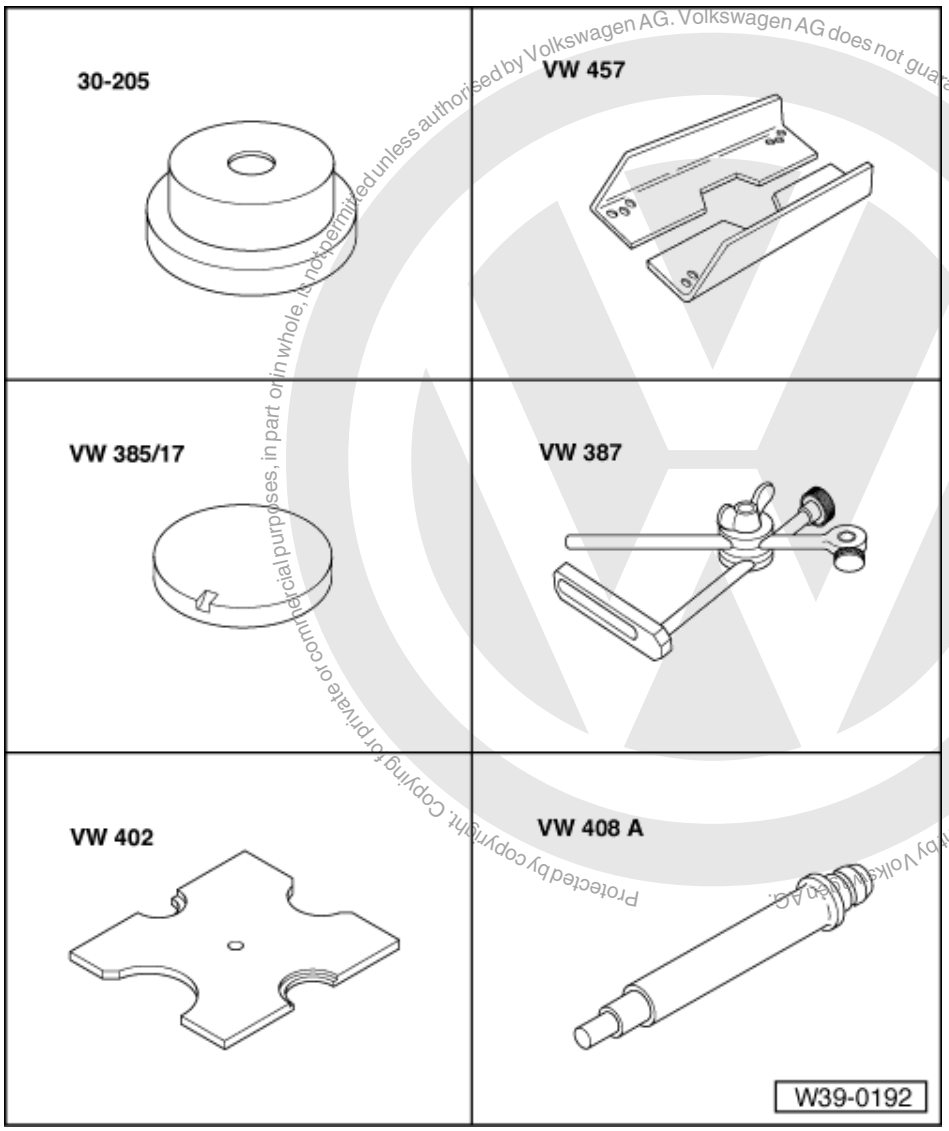

- 30-205 Thrust plate
- VW 457 Support rails
- VW 385/17 End measuring plate
- VW 387 Universal dial gauge bracket
- VW 402 Thrust plate
- VW 408 A Press tool

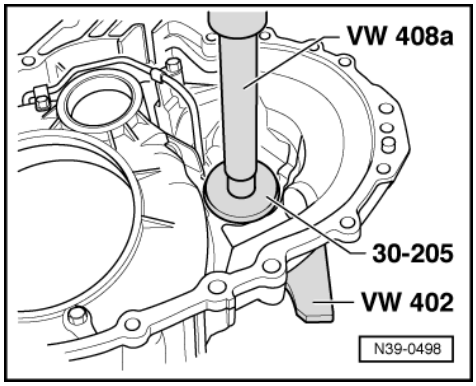

Conditions:

- Dismantle planetary gearbox from ATF pump down to and including large sun-wheel, => dismantling planetary gearbox from Page 96 .

Protected by copyright. Copying for private or commercial purposes, in part or in whole, is not permitted unless authorised by Volkswagen AG. Volkswagen AG does not guarantee or accept any liability with respect to the correctness of information in this document. Copyright by Volkswagen AG.

satelettronica

- Remove pinion shaft =>dismantling planetary gearbox from Page 96

- -> Pressing taper roller bearing outer race, without shim, into torque converter housing.
- Fit differential into gearbox housing.
- Fit torque converter housing and tighten 8 bolts to 30 Nm.

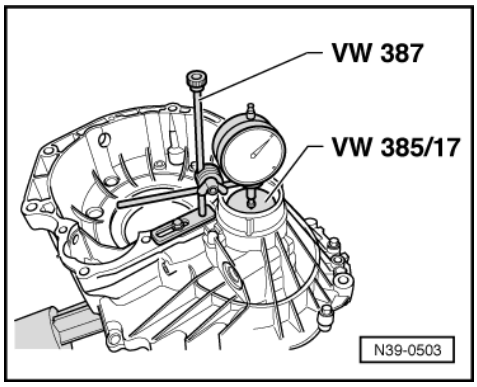

- -> Assemble special tool to measure play.
- Preload gauge to 1 mm and then "0".
  - Lift and lower differential.
  - Read off and note play on gauge.

When performing measurement, do not turn differential otherwise the bearings will settle and the result of the measurement will be falsified.

Determining thickness of shim

The specified bearing preload is obtained by adding a constant figure (0.16 mm) to the reading obtained.

Example:

Reading	0.94 mm
+ Preload (constant figure)	0.16 mm
= Thickness of shim	1.10 mm

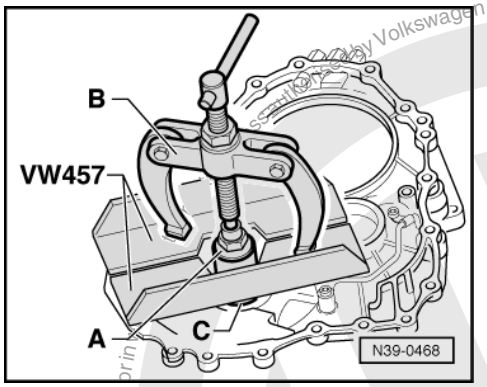

- Unbolt torque converter housing and remove differential from gearbox housing.
- -> Pull taper roller bearing outer race -C- out of torque converter housing.

A - Kukko 21/7 Internal puller

B - Kukko 22/2 Counter support

- Determine shims according to table:

  Part numbers

Protected by copyright. Copying for private or commercial purposes, in part or in whole, is not permitted unless authorised by Volkswagen AG. Volkswagen AG does not guarantee or accept any liability with respect to the correctness of information in this document. Copyright by Volkswagen AG.

satelettronica

=> Parts catalogue

Table of shims:

Shims (mm)		
0.12	0.40	0.76
0.14	0.44	0.80
0.16	0.48	0.84
0.20	0.52	0.88
0.24	0.60	0.92
0.28	0.64	0.98
0.32	0.68	1.44
0.36	0.72	

If the size of shim required is larger than that listed in the table, insert two shims totalling the correct figure.

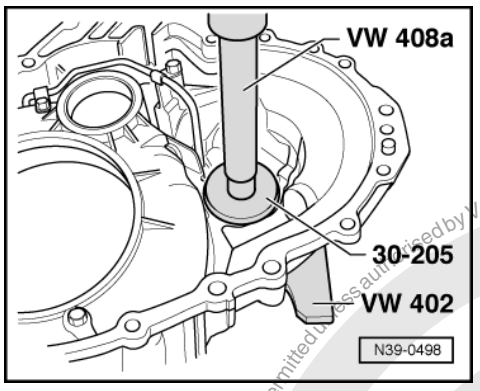

- -> Press in taper roller bearing outer race together with the shim as calculated (in example 1.10 mm).

3.5 - Adjusting drive pinion

It is necessary to readjust the pinion shaft when

- Gearbox housing
- Torque converter housing
- Output gear
- Pinion shaft

or

- Taper roller bearing

have been replaced.

Adjustment work => Page 205

Protected by copyright. Copying for private or commercial purposes, in part or in whole, is not permitted unless authorised by Volkswagen AG. Volkswagen AG does not guarantee or accept any liability with respect to the correctness of information in this document. Copyright by Volkswagen AG.
satelettronica

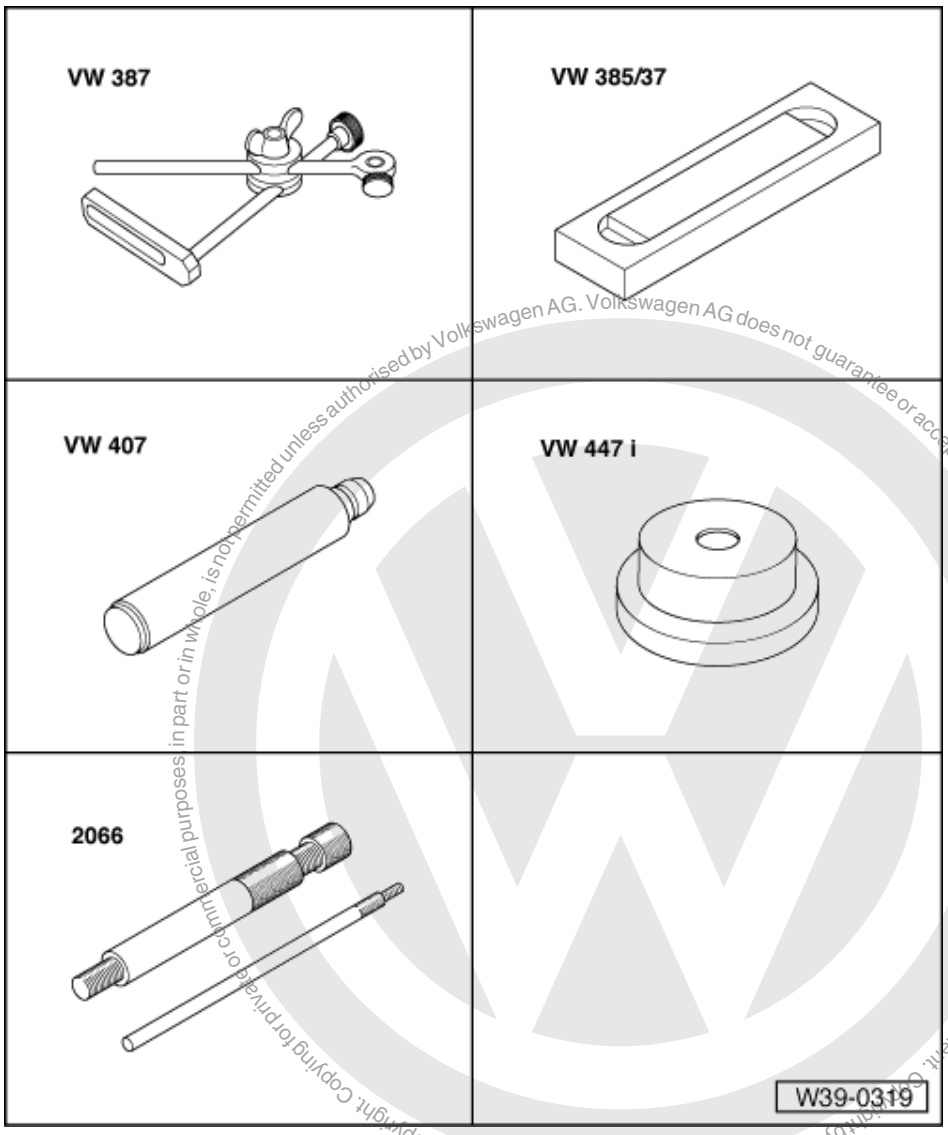

Protected by copyright. Copying for private or commercial purposes, in part or in whole, is not permitted unless authorised by Volkswagen AG. Volkswagen AG does not guarantee or accept any liability with respect to the correctness of information in this document. Copyright by Volkswagen AG.

satelettronica

Special tools and workshop equipment required

- VW 387 Universal dial gauge bracket
- VW 385/37 End measuring plate
- VW 407 Press tool
- VW 447 i Thrust plate
- Dial gauge
- 2066 Adapter for dial gauge

Conditions:

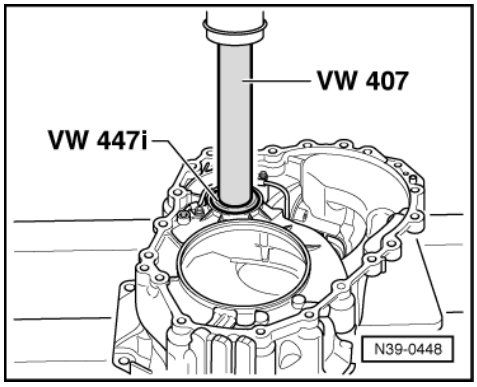

- Dismantle planetary gearbox from ATF pump down to and including large sun-wheel => dismantling planetary gearbox from Page 96 .
- Remove oil pan and valve chest => dismantling planetary gearbox from Page 96

Adjusting:

- -> Pressing taper roller bearing outer race, without shim, into torque converter housing.
- Fit pinion shaft into gearbox housing.
- Fit torque converter housing and tighten 8 bolts to 30 Nm.

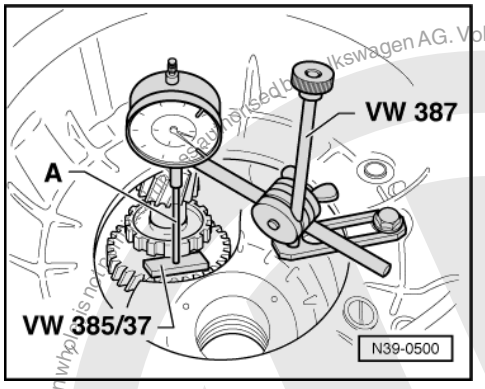

- -> Fit measuring appliance and D.T.I. (3 mm measuring range).
- Preload dial gauge to 1 mm and then set to "0"
  A - Dial gauge extension 100 mm from adapter 2066

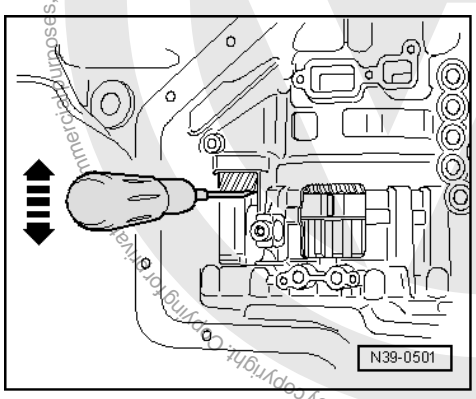

- -> Move pinion shaft up and down with a screwdriver on output gear.
- Read off play on dial gauge and note (example 1.02 mm).

when performing measurement, do not turn drive pinion as the bearings will otherwise settle and falsify the result of the measurement.

Determining thickness of shim

The specified bearing preload is obtained by adding a constant figure (0.18 mm) to the reading obtained.

Example:

Reading	1.02 mm
+ Preload (constant figure)	0.18 mm
= Thickness of shim	1.20 mm

- Determine shims according to table:

  Part numbers

=> Parts catalogue

satelettronica

Table of shims:

Shims (mm)		
0.10	0.44	0.72
0.20	0.48	0.76
0.24	0.52	0.80
0.28	0.56	0.84
0.32	0.60	0.88
0.36	0.64	0.94
0.40	0.68	

If the size of shim required is larger than that listed in the table, insert two shims totalling the correct figure.

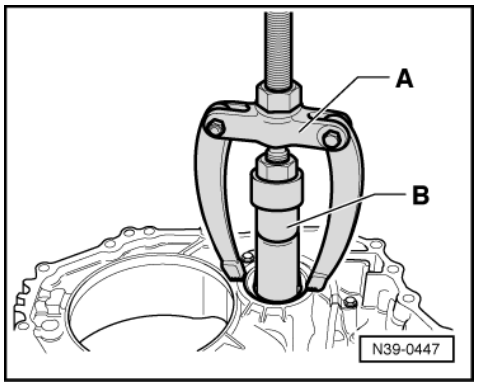

- -> Remove pinion shaft and pull taper roller bearing outer race out of torque converter housing.

A - Counter support, e.g. Kukko 22/2

B - Internal puller 46...58 mm, e.g. Kukko 21/7

- Order shim(s) from parts catalogue.
- Press in taper roller bearing outer race together with the correct shims (in example 1.20 mm).

4 - Definitions

4.1 - Definitions

These explanations refer only to this assembly group: Automatic gearbox 001 self-diagnosis. These definitions are not necessarily generally valid.

Further information on this subject can be found in

- Self-study programme No.176.

and in

- Workshop Manual Polo 1995 ▸, Self-diagnosis for automatic gearbox 001

ABS

Anti-locking brake system. Further information on the ABS can be found in the relevant self-study programmes.

Protected by copyright. Copying for private or commercial purposes, in part or in whole, is not permitted unless authorised by Volkswagen AG. Volkswagen AG does not guarantee or accept any liability with respect to the correctness of information in this document. Copyright by Volkswagen AG.
satelettronica

ATF (Automatic Transmission Fluid)

Gear oil for automatic gearbox.

=> ElsaWin; Internet area (globe); Language selection; Technical Information; Gearbox oils

ATF pump

Gear pump driven from the torque converter.

ATF level

The "level" of ATF in gearbox when full. To measure the ATF level, see the information in Workshop Manual.

Brakes

They brake and hold certain rotating parts in the gearbox. The automatic gearbox 001 has one brake band and one multi-plate brake. They differ to the clutches in that the brakes are supported on the gearbox housing.

Torque converter

Transfers the engine torque to the automatic gearbox and acts as a drive-away clutch. The torque converter also includes the lock-up clutch.

Throttle valve potentiometer

An engine component. The "throttle valve signal" originates from here.

Self-diagnosis

The capability of the control unit:

to recognise faults,

to react to faults,

to store faults,

to register faults and make them available in the measured value block.

Performing self-diagnosis

Connecting the fault reader to be able to interrogate the fault memory.

Electronic power control (EPC)

Terms like: EPC, electronic accelerator, accelerator module and electric throttle operation all refer to this component. Among other things, senders -G79- and -G185- and a throttle valve positioner are housed within.

EPC is always a component of engine control and thus communicates initially with the engine control unit. Because when doing this, for example, the signal for the kickdown switch is also generated, the engine control unit stores the data in the data bus, in order that other control units have access to it.

Further information on this subject can be found in

- Self-study programme no. 210.

Throttle position sender

=>Electronic power control (EPC)

Protected by copyright. Copying for private or commercial purposes, in part or in whole, is not permitted unless authorised by Volkswagen AG. Volkswagen AG does not guarantee or accept any liability with respect to the correctness of information in this document. © Copyright by Volkswagen AG.
satelettronica

Performing electrical check

A targeted check of the electronic components by performing certain measurements.

Gearbox speed sender -G38-

The sender records the speed of -K3- and transmits it to the automatic gearbox control unit.

Road speed sender -G68-

The sender records the speed of the output gear and transmits it to the automatic gearbox control unit (if no speedometer/rev counter sender is fitted, the signal is also used for this purpose).

Gearbox oil temperature sender -G93-

Monitors the temperature of the ATF.

Kickdown switch

The kickdown switch is integrated into the accelerator cable. When the accelerator pedal is depressed fully onto stop the gearbox changes down for acceleration.

Clutches

Together with the brakes, they engage the individual gears.

Wiring

Routing of electrical wiring and components in vehicle.

Selector lever lock solenoid N110

Located in the selector mechanism close to the selector lever. Prevents movement (involuntary) of the selector lever from positions "P" and "N" as long as the brake pedal is not depressed.

Solenoid valves

Open and close the oil channels to the clutches and brakes.

Multi function switch -F125-

Electrical switches with various tasks. Further information on this can be found in Self-study programme No. 180.

Emergency running

"Condition of the control unit" when certain faults are recognised in order to maintain driving safety, to protect the gearbox against damage and at the same time to ensure that driving characteristics are impaired as little as possible.

Parking lock

The parking lock gear is mechanically locked when the vehicle is stationary and prevents the vehicle from rolling (involuntarily).

Planetary gearbox

Is a mechanical component of the automatic gearbox and is switched via the clutches and brakes without loss of power.

Protected by copyright. Copyright by Volkswagen AG. Copyright. Copying for private or commercial purposes, in part or in whole, is not permitted unless authorised by Volkswagen AG. Volkswagen AG does not guarantee or accept any liability with respect to the correctness of information in this document.
satelettronica

Pendulum support

Designation for a part of the assembly mounting.

Valve chest

Located on the bottom of the gearbox and is enclosed in the ATF pan. Its valves regulate the pressure and distribute it via the oil channels to the switch elements (clutches and brakes).

TCC (Torque converter lock-up clutch)

Transfers the engine torque mechanically to the gearbox.

Protected by copyright. Copying for private or commercial purposes, in part or in whole, is not permitted unless authorised by Volkswagen AG. Volkswagen AG does not guarantee or accept any liability with respect to the correctness of information in this document. Copyright by Volkswagen AG.

satelettronica